Sean Gaffney, Chair
Scott Winship, Vice-Chair
Chris Beale
Donald Erickson
Benjamin Fields
Tina Lee
Alexandria Teague
Erle Thompson
Stephen Wamback

HANDOUTS and PRESENTATIONS

Meeting of February 5, 2014

1. **Draft Hilltop Subarea Plan**
   (Handout; for Discussion Item D-1)

2. **Temporary Homeless Camp Permitting Process**
   (PowerPoint; for Discussion Item D-2)

3. **Sustainability Code Amendment (Annual Amendment #2014-09)**
   (PowerPoint; for Discussion Item D-3)

4. **Plan and Code Cleanup (Annual Amendment #2014-11)**
   (PowerPoint; for Discussion Item D-4)

5. **Commissioner Tina Lee's Comments on the Discussion Items**
   (Handout; for all Discussion Items)

The City of Tacoma does not discriminate on the basis of disability in any of its programs, activities, or services. To request this information in an alternative format or to request a reasonable accommodation, please contact the Planning and Development Services Department at (253) 591-5056 (voice) or (253) 591-5820 (TTY).

MLK Subarea Plan Planning Commission Public Hearing Comments

The following are the key issues taken from written comments that were received to date and the oral testimony that was given at the January 22, 2014, Planning Commission Public Hearing.

- The availability of affordable housing within the subarea.
- Potential displacement of existing residents due to the desired re-development of Hilltop; Gentrification.
- The establishment of an affordable housing monitoring system for the Hilltop Mixed-Use Center.
- The requirement for developers to complete a transit services analysis for both Level 1 and Level 2 project should be included. As currently proposed, only Level 2 would be required to provide the analysis.
- Concern over redevelopment of 11th and MLK.
- Concern that the Plan does not reflect the Hilltop community as a whole and instead favors a only small selection of residents.
- Concern about toxics cleanup and water quality issues, how the State will be apprised of new projects in this area, and how projects will be assured to address these issues.

Sean Gaffney, Chair
Scott Winship, Vice-Chair
Chris Beale
Donald Erickson
Benjamin Fields
Tina Lee
Alexandria Teague
Erle Thompson
Stephen Wamback

MINUTES (Approved on 2-5-14)

TIME: Wednesday, January 22, 2014, 4:00 p.m.

PLACE: Council Chambers, Tacoma Municipal Building, 1st Floor
747 Market Street, Tacoma, WA 98402

PRESENT: Sean Gaffney (Chair), Scott Winship (Vice-Chair), Chris Beale, Tina Lee (excused at 4:45), Alexandria Teague, Stephen Wamback

ABSENT: Benjamin Fields, Donald Erickson, Erle Thompson

Excerpt

2. Public Hearing – Draft Hilltop Subarea Plan

At 5:00 p.m., Chair Gaffney called the public hearing to order and reviewed the procedures. Mr. Boudet provided an overview of the Draft Hilltop Subarea Plan. Chair Gaffney called for testimony. The following citizens testified:

(1) **Justin Leighton, Hilltop Working Group:**
Mr. Leighton praised City staff for work over the past two years and collaborating with community groups, leaders, and residents. He acknowledged that the Hilltop Subarea Plan was not received well by both the community and the Hilltop Working Group when the process first started; the community wanted to make sure that the plan would be implementable, realistic, pragmatic, and reflecting shared values of the community. Mr. Leighton now believes the Plan accomplishes each of these tasks and looks forward to helping the City implement the Plan.

(2) **Connie Brown, Tacoma-Pierce County Affordable Housing Consortium:**
Ms. Brown extended compliments to City staff for including the community in the planning process and stated that the plan is a promising start to a resurgence of Hilltop because it incorporates business, fun, multimodal transportation and affordable housing.

(3) **Aaron Wilson, Hilltop Action Coalition:**
Mr. Wilson represented block leaders and stated that the overall feeling is enthusiasm about the project and they are thankful that it includes a thoughtful analysis of how to keep the people who live in Hilltop included in the community.

(4) **Timothy Johnson, Johnson Commercial Properties:**
Mr. Johnson thanked staff for allowing for a lot of input from different groups.

(5) **Liz Dunbar, Tacoma Community House:**
Ms. Dunbar commended staff for including everyone in the process and the Tacoma Community House looks forward to helping implement the visions in the plan and believes it will help include the community and provide more opportunities for the people that they serve. Ms. Dunbar noted that it will be a challenge to both encourage development and keep the character of the community as well.

(6) **Sean Lloyd:**
Mr. Lloyd requested clarification of the processes of the Planning Commission's meeting and two public hearings tonight. He also had questions regarding the Draft Hilltop Subarea Plan and whether "public testimony" entails interactive discussions about the Plan. Chair Gaffney explained the purpose and process of the public hearing and suggested Mr. Lloyd talk to staff after the hearing.

(7) **Josh Rizeberg, Hilltop Build and Destroy (B.A.D.):**
Mr. Rizeberg expressed concern that the Hilltop Subarea Plan over-represents the corporate interests of hospitals, real estate developers and only the people who've attended meetings, and indicated that some view this Plan as a form of gentrification.

(8) **Nick Brandenburg:**
Mr. Brandenburg expressed thanks for including many different groups in the planning process, at the same time he wanted to indicate that affordable housing is a key part of this plan and wants to make sure that businesses and people within the community have a stake in the process of developing the community over the coming years.

Seeing no more citizens coming forward to testify, Chair Gaffney reiterated that the public hearing record will remain open through January 24, 2014 to receive written comments, and closed the public hearing at 5:32 p.m.

Form Letter Names, Addresses and Emails

Name	Address	City	State	Zip	Email
Alton Bradby	1304 South 8th Street	Tacoma	WA	98405	
J.R. Tusill	1308 St E	Tacoma	WA	98405	jtusill@hotmail.com
Amber Uebelacker	1301 South 8th Street, Apt B	Tacoma	WA	98405	uebelackeramber@yahoo.com
Patricia Zeeck	813 South Sheridan Ave, #B	Tacoma	WA	98405	patriciaaeeck@gmail.com
Harold Lidren	1301 South 8th Street, Apt B	Tacoma	WA	98405	
Timothy Swindall	1612 South L Street	Tacoma	WA	98405	
Alton B Sierra	608 North 'L' Street	Tacoma	WA	98405	sbdirtts18@gmail.com
Dustin Hellman	1320 South 7th Street	Tacoma	WA		kandi1rav3r@gmail.com
Kelly Vinscant	Not Provided				
Parul Marshall	1312 South 7th Street	Tacoma	WA	98405	pmarshall7943@yahoo.com
Parul Kammerzell	1304 South 7th Street, #C	Tacoma	WA	98405	
C. Thompson	Not Provided				
Lori Larkins	1401 South M Street, #201	Tacoma	WA	98405	lorilarkins@yahoo.com
Jessica Pierce	811 South M Street	Tacoma	WA	98405	pierce.jessica@yahoo.com
Mary Hilliard	811 South M Street, #3	Tacoma	WA	98405	marymigh.mh@gmail.com
Emily Inskeep	1301 South 9th Street	Tacoma	WA	98405	sabrinzginl@yahoo.com
Antonie Larkins	Not Provided				antionelarkins@ymail.com
S. Kachin	1409 South M Street, #201	Tacoma	WA	98405	
Kerry Morrisson	1401 South M Street, #102	Tacoma	WA	98405	
Marcela Salazar	1415 South M Street, #102	Tacoma	WA	98405	marcela_salazar8918@yahoo.com
John Hable	Not Provided				
Whitney Brady	1231 South Ridegwood Ave	Tacoma	WA	98405	whikid@hotmail.com
Chandra Marquez	1009 South M Street	Tacoma	WA	98405	chandra00800@gmail.com
Cherie Sybesma	5402 South Cushman Ave	Tacoma	WA	98408	cheriesybesma@gmail.com
Colleen Hamby	Not Provided				jbirdsma@hotmail.com
Jonell A. Green	5402 South Cushman Ave	Tacoma	Wa	98408	slapsquahsingtonmusic@gmail.com
Maeli Facfarland	2508 South 96th Street, #2	Tacoma	WA	98444	maeli.amis@gmail.com
Timothy Washington	2132 South Ash Street	Tacoma	WA	98405	jack84j@gmail.com

From: Whikid [mailto:whikid@hotmail.com]
Sent: Tuesday, January 28, 2014 5:48 PM
To: Planning
Subject: Hilltop Subarea Plan

Dear Mr. Boudet,

My name is Whitney Brady and I am a resident of the hilltop area that is deeply concerned with the current development of this area. My biggest concern is that housing will no longer be affordable for me and quickly displace my family. The city has adopted a view that "affordable housing" is based on a person/family making 80% of the county-wide median income, specifically $40,150 for a single person and $57,350 for a family of four. The number of people who currently live in this area that meet that income level is extremely low. Additionally, the city is choosing to adopt the very minimum goal of 25% allocation of new units to meet this idea of "affordable" as set forth by the Pierce County Regional Council, which seems to be in direct conflict to what I understand as Tacoma's goals and image. This approach to "affordable housing" is very unacceptable to me. The hilltop area has always been culturally diverse and vibrant with minorities, and the current development plans undertaken by the city will ultimately push all of these people out, only to make way for more affluent individuals. As new units are built they will be at market rate prices, intended only for those that exceed the "affordable housing" income levels. This will quickly increase the rental- rates of the current units, and I believe the goal of 25% of "total housing units in Hilltop shall be affordable to households earning up to 80 percent of the countywide median income" (Hilltop Subarea Plan) will be reached and surpassed relatively fast.

The Hilltop Subarea Plan suggests establishing an "affordable housing monitoring system for the Hilltop Mixed-Use Center," and exploring the "creation of a system that activates policies and regulations designed to promote the production of new affordable housing when affordability trends project a future shortfall," which I believe to be of extremely high importance as the city is increasing its development activities within this neighborhood. It is also important who leads these projects and the representation of a diverse selection of current residents within the organization itself, not the business interests or outside entities.

The Hilltop Subarea Plan contains directives for establishing "effective public information and feedback materials and conduct frequent town halls, public open houses, and other events at locations in the Hilltop Subarea to encourage public access and facilitate dialogue on Hilltop Subarea Plan implementation priorities, policies, programs, projects, and budgets" and I believe it is important to make this happen immediately. The outreach conducted in preparation of the Hilltop Subarea Plan was noted to "reflect more of the ideas of people who live outside of the area that the plan is trying to attract rather than current residents" (Tom Beckwith, MLK Subarea Plan and EIS Working Group Meeting – November 8, 2012) so I have very deep concerns about whether the city is genuine in addressing the concerns of the current residents.

The groups such as Hilltop Business District Association, Central Neighborhood Council, and Hilltop Action Coalition that the city currently works with represent the needs of a very small selection of residents in the community with interests other than affordable housing, and I think the planning commission needs to do much better at getting more fruitful input from the actual residents of Hilltop.

Dear Mr. Boudet,

My name is Maeli Macfarland and I'm planning on moving to the hilltop area that is deeply concerned with the current development of this area. My biggest concern is that housing will no longer be affordable for me and quickly displace my family. The city has adopted a view that "affordable housing" is based on a person/family making 80% of the county-wide median income, specifically $40,150 for a single person and $57,350 for a family of four. The number of people who currently live in this area that meet that income level is extremely low. Additionally, the city is choosing to adopt the very minimum goal of 25% allocation of new units to meet this idea of "affordable" as set forth by the Pierce County Regional Council, which seems to be in direct conflict to what I understand as Tacoma's goals and image. This approach to "affordable housing" is very unacceptable to me. The hilltop area has always been culturally diverse and vibrant with minorities, and the current development plans undertaken by the city will ultimately push all of these people out, only to make way for more affluent individuals. As new units are built they will be at market rate prices, intended only for those that exceed the "affordable housing" income levels. This will quickly increase the rental- rates of the current units, and I believe the goal of 25% of "total housing units in Hilltop shall be affordable to households earning up to 80 percent of the countywide median income" (Hilltop Subarea Plan) will be reached and surpassed relatively fast.

The Hilltop Subarea Plan suggests establishing an "affordable housing monitoring system for the Hilltop Mixed-Use Center," and exploring the "creation of a system that activates policies and regulations designed to promote the production of new affordable housing when affordability trends project a future shortfall," which I believe to be of extremely high importance as the city is increasing its development activities within this neighborhood. It is also important who leads these projects and the representation of a diverse selection of current residents within the organization itself, not the business interests or outside entities.

The Hilltop Subarea Plan contains directives for establishing "effective public information and feedback materials and conduct frequent town halls, public open houses, and other events at locations in the Hilltop Subarea to encourage public access and facilitate dialogue on Hilltop Subarea Plan implementation priorities, policies, programs, projects, and budgets" and I believe it is important to make this happen immediately. The outreach conducted in preparation of the Hilltop Subarea Plan was noted to "reflect more of the ideas of people who live outside of the area that the plan is trying to attract rather than current residents" (Tom Beckwith, MLK Subarea Plan and EIS Working Group Meeting – November 8, 2012) so I have very deep concerns about whether the city is genuine in addressing the concerns of the current residents.

The groups such as Hilltop Business District Association, Central Neighborhood Council, and Hilltop Action Coalition that the city currently works with represent the needs of a very small selection of residents in the community with interests other than affordable housing, and I think the planning commission needs to do much better at getting more fruitful input from the actual residents of Hilltop.

Phone Number (206) 265 9787
Address 2508 So. 96 St. #2 Tacoma WA 98444
Email maeli.amis@gmail.com

From: Nancy Boyle [mailto:squashingtonapple@gmail.com]
Sent: Wednesday, January 29, 2014 11:09 AM
To: Planning
Cc: AwallAka2piece .
Subject: Planning and Development

Dear Mr. Boudet,

My name is Nancy Boyle and I am a concerned citizen for residents of the hilltop area and I am deeply concerned with the current development of this area. My biggest concern is that housing will no longer be affordable and it will quickly displace the members of the hilltop area. The city has adopted a view that "affordable housing" is based on a person/family making 80% of the county-wide median income, specifically $40,150 for a single person and $57,350 for a family of four. The number of people who currently live in this area that meet that income level is extremely low. Additionally, the city is choosing to adopt the very minimum goal of 25% allocation of new units to meet this idea of "affordable" as set forth by the Pierce County Regional Council, which seems to be in direct conflict to what I understand as Tacoma's goals and image. This approach to "affordable housing" is very unacceptable to me. The hilltop area has always been culturally diverse and vibrant with minorities, and the current development plans undertaken by the city will ultimately push all of these people out, only to make way for more affluent individuals. As new units are built they will be at market rate prices, intended only for those that exceed the "affordable housing" income levels. This will quickly increase the rental- rates of the current units, and I believe the goal of 25% of "total housing units in Hilltop shall be affordable to households earning up to 80 percent of the countywide median income" (Hilltop Subarea Plan) will be reached and surpassed relatively fast.

The Hilltop Subarea Plan suggests establishing an "affordable housing monitoring system for the Hilltop Mixed-Use Center," and exploring the "creation of a system that activates policies and regulations designed to promote the production of new affordable housing when affordability trends project a future shortfall," which I believe to be of extremely high importance as the city is increasing its development activities within this neighborhood. It is also important who leads these projects and the representation of a diverse selection of current residents within the organization itself, not the business interests or outside entities.

The Hilltop Subarea Plan contains directives for establishing "effective public information and feedback materials and conduct frequent town halls, public open houses, and other events at locations in the Hilltop Subarea to encourage public access and facilitate dialogue on Hilltop Subarea Plan implementation priorities, policies, programs, projects, and budgets" and I believe it is important to make this happen immediately. The outreach conducted in preparation of the Hilltop Subarea Plan was noted to "reflect more of the ideas of people who live outside of the area that the plan is trying to attract rather than current residents" (Tom Beckwith, MLK Subarea Plan and EIS Working Group Meeting – November 8, 2012) so I have very deep concerns about whether the city is genuine in addressing the concerns of the current residents.

The groups such as Hilltop Business District Association, Central Neighborhood Council, and Hilltop Action Coalition that the city currently works with represent the needs of a very small selection of residents in the community with interests other than affordable housing, and I think the planning commission needs to do much better at getting more fruitful input from the actual residents of Hilltop.

Phone Number: (253)-397-8634
Address: 3014 S. 43rd St Unit A Tacoma, WA 98409
Email: squashingtonapple@gmail.com

From: AwallAka2piece . [mailto:slapsquashingtonmusic@gmail.com]
Sent: Wednesday, January 29, 2014 9:23 AM
To: Planning; Jay Gee
Subject: Planning and Development

Dear Mr. Boudet,

My name is Jonell A. Green and I am a resident of the hilltop area that is deeply concerned with the current development of this area. My biggest concern is that housing will no longer be affordable for me and quickly displace my family. The city has adopted a view that "affordable housing" is based on a person/family making 80% of the county-wide median income, specifically $40,150 for a single person and $57,350 for a family of four. The number of people who currently live in this area that meet that income level is extremely low. Additionally, the city is choosing to adopt the very minimum goal of 25% allocation of new units to meet this idea of "affordable" as set forth by the Pierce County Regional Council, which seems to be in direct conflict to what I understand as Tacoma's goals and image. This approach to "affordable housing" is very unacceptable to me. The hilltop area has always been culturally diverse and vibrant with minorities, and the current development plans undertaken by the city will ultimately push all of these people out, only to make way for more affluent individuals. As new units are built they will be at market rate prices, intended only for those that exceed the "affordable housing" income levels. This will quickly increase the rental- rates of the current units, and I believe the goal of 25% of "total housing units in Hilltop shall be affordable to households earning up to 80 percent of the countywide median income" (Hilltop Subarea Plan) will be reached and surpassed relatively fast.

The Hilltop Subarea Plan suggests establishing an "affordable housing monitoring system for the Hilltop Mixed-Use Center," and exploring the "creation of a system that activates policies and regulations designed to promote the production of new affordable housing when affordability trends project a future shortfall," which I believe to be of extremely high importance as the city is increasing its development activities within this neighborhood. It is also important who leads these projects and the representation of a diverse selection of current residents within the organization itself, not the business interests or outside entities.

The Hilltop Subarea Plan contains directives for establishing "effective public information and feedback materials and conduct frequent town halls, public open houses, and other events at locations in the Hilltop Subarea to encourage public access and facilitate dialogue on Hilltop Subarea Plan implementation priorities, policies, programs, projects, and budgets" and I believe it is important to make this happen immediately. The outreach conducted in preparation of the Hilltop Subarea Plan was noted to "reflect more of the ideas of people who live outside of the area that the plan is trying to attract rather than current residents" (Tom Beck with, MLK Subarea Plan and EIS Working Group Meeting – November 8, 2012) so I have very deep concerns about whether the city is genuine in addressing the concerns of the current residents.

The groups such as Hilltop Business District Association, Central Neighborhood Council, and Hilltop Action Coalition that the city currently works with represent the needs of a very small selection of residents in the community with interests other than affordable housing, and I think the planning commission needs to do much better at getting more fruitful input from the actual residents of Hilltop.

Phone Number (253) 228-8229
Address 5402 S. Cushman 98408
Email slapsquashingmusic@gmail.com

From: Jack Johnson [mailto:jack84j@gmail.com]
Sent: Thursday, January 30, 2014 7:03 PM
To: Planning; slapsquashingtonmusic@gmail.com
Subject: Development Plan

Dear Mr. Boudet,

My name is timothy washington and I am a resident of the hilltop area that is deeply concerned with the current development of this area. My biggest concern is that housing will no longer be affordable for me and quickly displace my family. The city has adopted a view that "affordable housing" is based on a person/family making 80% of the county-wide median income, specifically $40,150 for a single person and $57,350 for a family of four. The number of people who currently live in this area that meet that income level is extremely low. Additionally, the city is choosing to adopt the very minimum goal of 25% allocation of new units to meet this idea of "affordable" as set forth by the Pierce County Regional Council, which seems to be in direct conflict to what I understand as Tacoma's goals and image. This approach to "affordable housing" is very unacceptable to me. The hilltop area has always been culturally diverse and vibrant with minorities, and the current development plans undertaken by the city will ultimately push all of these people out, only to make way for more affluent individuals. As new units are built they will be at market rate prices, intended only for those that exceed the "affordable housing" income levels. This will quickly increase the rental- rates of the current units, and I believe the goal of 25% of "total housing units in Hilltop shall be affordable to households earning up to 80 percent of the countywide median income" (Hilltop Subarea Plan) will be reached and surpassed relatively fast.

The Hilltop Subarea Plan suggests establishing an "affordable housing monitoring system for the Hilltop Mixed-Use Center," and exploring the "creation of a system that activates policies and regulations designed to promote the production of new affordable housing when affordability trends project a future shortfall," which I believe to be of extremely high importance as the city is increasing its development activities within this neighborhood. It is also important who leads these projects and the representation of a diverse selection of current residents within the organization itself, not the business interests or outside entities.

The Hilltop Subarea Plan contains directives for establishing "effective public information and feedback materials and conduct frequent town halls, public open houses, and other events at locations in the Hilltop Subarea to encourage public access and facilitate dialogue on Hilltop Subarea Plan implementation priorities, policies, programs, projects, and budgets" and I believe it is important to make this happen immediately. The outreach conducted in preparation of the Hilltop Subarea Plan was noted to "reflect more of the ideas of people who live outside of the area that the plan is trying to attract rather than current residents" (Tom Beck with, MLK Subarea Plan and EIS Working Group Meeting – November 8, 2012) so I have very deep concerns about whether the city is genuine in addressing the concerns of the current residents.

The groups such as Hilltop Business District Association, Central Neighborhood Council, and Hilltop Action Coalition that the city currently works with represent the needs of a very small selection of residents in the community with interests other than affordable housing, and I think the planning commission needs to do much better at getting more fruitful input from the actual residents of Hilltop.

Phone Number (253)590-8312
Address 2132 s. ash st tacoma, wa 98405
Email jack84j@gmail.com

RE: Planning Commission accepting feedback until February 24th.

Planning Commission meetings:
February 5th - 4pm
February 19th – 4pm
March 5th – 4pm
March 19th – 4pm

Brian Boudet - Urban Planner
Planning and Development Services Department
747 Market Street
Room 345
Tacoma, WA 98402
Phone: (253) 573-2389
Fax: (253) 591-5443
planning@cityoftacoma.org

Dear Mr. Boudet,

My name is Colleen Hamby , and I am a prospective resident of the hilltop area that is deeply concerned with the current development of this area. My biggest concern is that housing will no longer be affordable for me and quickly displace my family. The city has adopted a view that "affordable housing" is based on a person/family making 80% of the county-wide median income, specifically $40,150 for a single person and $57,350 for a family of four. The number of people who currently live in this area that meet that income level is extremely low. Additionally, the city is choosing to adopt the very minimum goal of 25% allocation of new units to meet this idea of "affordable" as set forth by the Pierce County Regional Council, which seems to be in direct conflict to what I understand as Tacoma's goals and image. This approach to "affordable housing" is very unacceptable to me. The hilltop area has always been culturally diverse and vibrant with minorities, and the current development plans undertaken by the city will ultimately push all of these people out, only to make way for more affluent individuals. As new units are built they will be at market rate prices, intended only for those that exceed the "affordable housing" income levels. This will quickly increase the rental- rates of the current units, and I believe the goal of 25% of "total housing units in Hilltop shall be affordable to households earning up to 80 percent of the countywide median income" (Hilltop Subarea Plan) will be reached and surpassed relatively fast.

The Hilltop Subarea Plan suggests establishing an "affordable housing monitoring system for the Hilltop Mixed-Use Center," and exploring the "creation of a system that activates policies and regulations designed to promote the production of new affordable housing when affordability trends project a future shortfall," which I believe to be of extremely high importance as the city is increasing its development activities within this neighborhood. It is also important who leads these projects and the representation of a diverse selection of current residents within the organization itself, not the business interests or outside entities.

The Hilltop Subarea Plan contains directives for establishing "effective public information and feedback materials and conduct frequent town halls, public open houses, and other events at locations in the Hilltop Subarea to encourage public access and facilitate dialogue on Hilltop Subarea Plan implementation priorities, policies, programs, projects, and budgets" and I believe it is important to make this happen immediately. The outreach conducted in preparation of the Hilltop Subarea Plan was noted to "reflect more of the ideas of people who live outside of the area that the plan is trying to attract rather than current residents" (Tom Beckwith, MLK Subarea Plan and EIS Working Group Meeting – November 8, 2012) so I have very deep concerns about whether the city is genuine in addressing the concerns of the current residents.

The groups such as Hilltop Business District Association, Central Neighborhood Council, and Hilltop Action Coalition that the city currently works with represent the needs of a very small selection of residents in the community with interests other than affordable housing, and I think the planning commission needs to do much better at getting more fruitful input from the actual residents of Hilltop.

I have been aggressively looking to invest in a home in the area, and want to feel assured that I am looking at a sound investment.

Phone Number (206)852-5546
Address
Email jbirdsma@hotmail.com

From: Chandra m [mailto:chandra00800@gmail.com]
Sent: Thursday, January 30, 2014 11:01 AM
To: Planning
Subject: Urban Plan for Hilltop, Tacoma

Dear Mr. Boudet,

My name is Chandra and I am a resident of the hilltop area that is deeply concerned with the current development of this area. My biggest concern is that housing will no longer be affordable for me and quickly displace my family. The city has adopted a view that "affordable housing" is based on a person/family making 80% of the county-wide median income, specifically $40,150 for a single person and $57,350 for a family of four. The number of people who currently live in this area that meet that income level is extremely low. Additionally, the city is choosing to adopt the very minimum goal of 25% allocation of new units to meet this idea of "affordable" as set forth by the Pierce County Regional Council, which seems to be in direct conflict to what I understand as Tacoma's goals and image. This approach to "affordable housing" is very unacceptable to me. The hilltop area has always been culturally diverse and vibrant with minorities, and the current development plans undertaken by the city will ultimately push all of these people out, only to make way for more affluent individuals. As new units are built they will be at market rate prices, intended only for those that exceed the "affordable housing" income levels. This will quickly increase the rental- rates of the current units, and I believe the goal of 25% of "total housing units in Hilltop shall be affordable to households earning up to 80 percent of the countywide median income" (Hilltop Subarea Plan) will be reached and surpassed relatively fast.

The Hilltop Subarea Plan suggests establishing an "affordable housing monitoring system for the Hilltop Mixed-Use Center," and exploring the "creation of a system that activates policies and regulations designed to promote the production of new affordable housing when affordability trends project a future shortfall," which I believe to be of extremely high importance as the city is increasing its development activities within this neighborhood. It is also important who leads these projects and the representation of a diverse selection of current residents within the organization itself, not the business interests or outside entities.

The Hilltop Subarea Plan contains directives for establishing "effective public information and feedback materials and conduct frequent town halls, public open houses, and other events at locations in the Hilltop Subarea to encourage public access and facilitate dialogue on Hilltop Subarea Plan implementation priorities, policies, programs, projects, and budgets" and I believe it is important to make this happen immediately. The outreach conducted in preparation of the Hilltop Subarea Plan was noted to "reflect more of the ideas of people who live outside of the area that the plan is trying to attract rather than current residents" (Tom Beckwith, MLK Subarea Plan and EIS Working Group Meeting – November 8, 2012) so I have very deep concerns about whether the city is genuine in addressing the concerns of the current residents.

The groups such as Hilltop Business District Association, Central Neighborhood Council, and Hilltop Action Coalition that the city currently works with represent the needs of a very small selection of residents in the community with interests other than affordable housing, and I think the planning commission needs to do much better at getting more fruitful input from the actual residents of Hilltop.

Thank you for your time,

Chandra Marquez
253.298.9525
1009 south M street
Tacoma WA 98405

From: Cherie Sybesma [mailto:cheriesybesma@gmail.com]
Sent: Friday, January 31, 2014 4:25 PM
To: Planning
Cc: squashingtonmusic@gmail.com
Subject: Land Development

Dear Mr. Boudet,

My name is Cherie Sybesma and I am a resident of Tacoma that is deeply concerned with the current development of this area. My biggest concern is that housing will no longer be affordable for me and quickly displace my family. The city has adopted a view that "affordable housing" is based on a person/family making 80% of the county-wide median income, specifically $40,150 for a single person and $57,350 for a family of four. The number of people who currently live in this area that meet that income level is extremely low. Additionally, the city is choosing to adopt the very minimum goal of 25% allocation of new units to meet this idea of "affordable" as set forth by the Pierce County Regional Council, which seems to be in direct conflict to what I understand as Tacoma's goals and image. This approach to "affordable housing" is very unacceptable to me. The hilltop area has always been culturally diverse and vibrant with minorities, and the current development plans undertaken by the city will ultimately push all of these people out, only to make way for more affluent individuals. As new units are built they will be at market rate prices, intended only for those that exceed the "affordable housing" income levels. This will quickly increase the rental- rates of the current units, and I believe the goal of 25% of "total housing units in Hilltop shall be affordable to households earning up to 80 percent of the countywide median income" (Hilltop Subarea Plan) will be reached and surpassed relatively fast.

The Hilltop Subarea Plan suggests establishing an "affordable housing monitoring system for the Hilltop Mixed-Use Center," and exploring the "creation of a system that activates policies and regulations designed to promote the production of new affordable housing when affordability trends project a future shortfall," which I believe to be of extremely high importance as the city is increasing its development activities within this neighborhood. It is also important who leads these projects and the representation of a diverse selection of current residents within the organization itself, not the business interests or outside entities.

The Hilltop Subarea Plan contains directives for establishing "effective public information and feedback materials and conduct frequent town halls, public open houses, and other events at locations in the Hilltop Subarea to encourage public access and facilitate dialogue on Hilltop Subarea Plan implementation priorities, policies, programs, projects, and budgets" and I believe it is important to make this happen immediately. The outreach conducted in preparation of the Hilltop Subarea Plan was noted to "reflect more of the ideas of people who live outside of the area that the plan is trying to attract rather than current residents" (Tom Beckwith, MLK Subarea Plan and EIS Working Group Meeting – November 8, 2012) so I have very deep concerns about whether the city is genuine in addressing the concerns of the current residents.

The groups such as Hilltop Business District Association, Central Neighborhood Council, and Hilltop Action Coalition that the city currently works with represent the needs of a very small selection of residents in the community with interests other than affordable housing, and I think the planning commission needs to do much better at getting more fruitful input from the actual residents of Hilltop.

Phone Number 253-426-8983
Address 5402 S Cushman
Email cheriesybesma@gmail.com

RE: Planning Commission accepting feedback until February 24th.

Planning Commission meetings:
February 5th - 4pm
February 19th – 4pm
March 5th – 4pm
March 19th – 4pm

Brian Boudet - Urban Planner
Planning and Development Services Departmen
747 Market Street
Room 345
Tacoma, WA 98402
Phone: (253) 573-2389
Fax: (253) 591-5443
planning@cityoftacoma.org

Dear Mr. Boudet, Alton Bradby

My name is and I am a resident of the hilltop area that is deeply concerned with the current development of this area. My biggest concern is that housing will no longer be affordable for me and quickly displace my family. The city has adopted a view that "affordable housing" is based on a person/family making 80% of the county-wide median income, specifically $40,150 for a single person and $57,350 for a family of four. The number of people who currently live in this area that meet that income level is extremely low. Additionally, the city is choosing to adopt the very minimum goal of 25% allocation of new units to meet this idea of "affordable" as set forth by the Pierce County Regional Council, which seems to be in direct conflict to what I understand as Tacoma's goals and image. This approach to "affordable housing" is very unacceptable to me. The hilltop area has always been culturally diverse and vibrant with minorities, and the current development plans undertaken by the city will ultimately push all of these people out, only to make way for more affluent individuals. As new units are built they will be at market rate prices, intended only for those that exceed the "affordable housing" income levels. This will quickly increase the rental- rates of the current units, and I believe the goal of 25% of "total housing units in Hilltop shall be affordable to households earning up to 80 percent of the countywide median income" (Hilltop Subarea Plan) will be reached and surpassed relatively fast.

The Hilltop Subarea Plan suggests establishing an "affordable housing monitoring system for the Hilltop Mixed-Use Center," and exploring the "creation of a system that activates policies and regulations designed to promote the production of new affordable housing when affordability trends project a future shortfall," which I believe to be of extremely high importance as the city is increasing its development activities within this neighborhood. It is also important who leads these projects and the representation of a diverse selection of current residents within the organization itself, not the business interests or outside entities.

The Hilltop Subarea Plan contains directives for establishing "effective public information and feedback materials and conduct frequent town halls, public open houses, and other events at locations in the Hilltop Subarea to encourage public access and facilitate dialogue on Hilltop Subarea Plan implementation priorities, policies, programs, projects, and budgets" and I believe it is important to make this happen immediately. The outreach conducted in preparation of the Hilltop Subarea Plan was noted to "reflect more of the ideas of people who live outside of the area that the plan is trying to attract rather than current residents" (Tom Beckwith, MLK Subarea Plan and EIS Working Group Meeting – November 8, 2012) so I have very deep concerns about whether the city is genuine in addressing the concerns of the current residents.

The groups such as Hilltop Business District Association, Central Neighborhood Council, and Hilltop Action Coalition that the city currently works with represent the needs of a very small selection of residents in the community with interests other than affordable housing, and I think the planning commission needs to do much better at getting more fruitful input from the actual residents of Hilltop.

Phone Number 206714-1673
Address 1308 S 8th Tacoma WA 98405
Email Ask11968@yahoo

RE: Planning Commission accepting feedback until February 24th.

Planning Commission meetings:
February 5th - 4pm
February 19th – 4pm
March 5th – 4pm
March 19th – 4pm

Brian Boudet - Urban Planner
Planning and Development Services Departmen
747 Market Street
Room 345
Tacoma, WA 98402
Phone: (253) 573-2389
Fax: (253) 591-5443
planning@cityoftacoma.org

Dear Mr. Boudet,

My name is JR Tugs and I am a resident of the hilltop area that is deeply concerned with the current development of this area. My biggest concern is that housing will no longer be affordable for me and quickly displace my family. The city has adopted a view that "affordable housing" is based on a person/family making 80% of the county-wide median income, specifically $40,150 for a single person and $57,350 for a family of four. The number of people who currently live in this area that meet that income level is extremely low. Additionally, the city is choosing to adopt the very minimum goal of 25% allocation of new units to meet this idea of "affordable" as set forth by the Pierce County Regional Council, which seems to be in direct conflict to what I understand as Tacoma's goals and image. This approach to "affordable housing" is very unacceptable to me. The hilltop area has always been culturally diverse and vibrant with minorities, and the current development plans undertaken by the city will ultimately push all of these people out, only to make way for more affluent individuals. As new units are built they will be at market rate prices, intended only for those that exceed the "affordable housing" income levels. This will quickly increase the rental- rates of the current units, and I believe the goal of 25% of "total housing units in Hilltop shall be affordable to households earning up to 80 percent of the countywide median income" (Hilltop Subarea Plan) will be reached and surpassed relatively fast.

The Hilltop Subarea Plan suggests establishing an "affordable housing monitoring system for the Hilltop Mixed-Use Center," and exploring the "creation of a system that activates policies and regulations designed to promote the production of new affordable housing when affordability trends project a future shortfall," which I believe to be of extremely high importance as the city is increasing its development activities within this neighborhood. It is also important who leads these projects and the representation of a diverse selection of current residents within the organization itself, not the business interests or outside entities.

The Hilltop Subarea Plan contains directives for establishing "effective public information and feedback materials and conduct frequent town halls, public open houses, and other events at locations in the Hilltop Subarea to encourage public access and facilitate dialogue on Hilltop Subarea Plan implementation priorities, policies, programs, projects, and budgets" and I believe it is important to make this happen immediately. The outreach conducted in preparation of the Hilltop Subarea Plan was noted to "reflect more of the ideas of people who live outside of the area that the plan is trying to attract rather than current residents" (Tom Beckwith, MLK Subarea Plan and EIS Working Group Meeting – November 8, 2012) so I have very deep concerns about whether the city is genuine in addressing the concerns of the current residents.

The groups such as Hilltop Business District Association, Central Neighborhood Council, and Hilltop Action Coalition that the city currently works with represent the needs of a very small selection of residents in the community with interests other than affordable housing, and I think the planning commission needs to do much better at getting more fruitful input from the actual residents of Hilltop.

Phone Number 253-279-8364
Address 1307 ST E TA, WA 98405
Email jtusill@Hotmail.com

RE: Planning Commission accepting feedback until February 24th.

Planning Commission meetings:
February 5th - 4pm
February 19th – 4pm
March 5th – 4pm
March 19th – 4pm

Brian Boudet - Urban Planner
Planning and Development Services Departmen
747 Market Street
Room 345
Tacoma, WA 98402
Phone: (253) 573-2389
Fax: (253) 591-5443
planning@cityoftacoma.org

Dear Mr. Boudet,

My name is Amber Uebelacker and I am a resident of the hilltop area that is deeply concerned with the current development of this area. My biggest concern is that housing will no longer be affordable for me and quickly displace my family. The city has adopted a view that "affordable housing" is based on a person/family making 80% of the county-wide median income, specifically $40,150 for a single person and $57,350 for a family of four. The number of people who currently live in this area that meet that income level is extremely low. Additionally, the city is choosing to adopt the very minimum goal of 25% allocation of new units to meet this idea of "affordable" as set forth by the Pierce County Regional Council, which seems to be in direct conflict to what I understand as Tacoma's goals and image. This approach to "affordable housing" is very unacceptable to me. The hilltop area has always been culturally diverse and vibrant with minorities, and the current development plans undertaken by the city will ultimately push all of these people out, only to make way for more affluent individuals. As new units are built they will be at market rate prices, intended only for those that exceed the "affordable housing" income levels. This will quickly increase the rental- rates of the current units, and I believe the goal of 25% of "total housing units in Hilltop shall be affordable to households earning up to 80 percent of the countywide median income" (Hilltop Subarea Plan) will be reached and surpassed relatively fast.

The Hilltop Subarea Plan suggests establishing an "affordable housing monitoring system for the Hilltop Mixed-Use Center," and exploring the "creation of a system that activates policies and regulations designed to promote the production of new affordable housing when affordability trends project a future shortfall," which I believe to be of extremely high importance as the city is increasing its development activities within this neighborhood. It is also important who leads these projects and the representation of a diverse selection of current residents within the organization itself, not the business interests or outside entities.

The Hilltop Subarea Plan contains directives for establishing "effective public information and feedback materials and conduct frequent town halls, public open houses, and other events at locations in the Hilltop Subarea to encourage public access and facilitate dialogue on Hilltop Subarea Plan implementation priorities, policies, programs, projects, and budgets" and I believe it is important to make this happen immediately. The outreach conducted in preparation of the Hilltop Subarea Plan was noted to "reflect more of the ideas of people who live outside of the area that the plan is trying to attract rather than current residents" (Tom Beckwith, MLK Subarea Plan and EIS Working Group Meeting – November 8, 2012) so I have very deep concerns about whether the city is genuine in addressing the concerns of the current residents.

The groups such as Hilltop Business District Association, Central Neighborhood Council, and Hilltop Action Coalition that the city currently works with represent the needs of a very small selection of residents in the community with interests other than affordable housing, and I think the planning commission needs to do much better at getting more fruitful input from the actual residents of Hilltop.

Phone Number 253-507-3268
Address 1301 S. 8th St Apt B Tacoma WA 98405
Email Uebelackeramber@yahoo.com

Amber Uebelacker

RE: Planning Commission accepting feedback until February 24th.

Planning Commission meetings:
February 5th - 4pm
February 19th – 4pm
March 5th – 4pm
March 19th – 4pm

Brian Boudet - Urban Planner
Planning and Development Services Department
747 Market Street
Room 345
Tacoma, WA 98402
Phone: (253) 573-2389
Fax: (253) 591-5443
planning@cityoftacoma.org

Dear Mr. Boudet,

My name is Patricia Zeeck and I am a resident of the hilltop area that is deeply concerned with the current development of this area. My biggest concern is that housing will no longer be affordable for me and quickly displace my family. The city has adopted a view that "affordable housing" is based on a person/family making 80% of the county-wide median income, specifically $40,150 for a single person and $57,350 for a family of four. The number of people who currently live in this area that meet that income level is extremely low. Additionally, the city is choosing to adopt the very minimum goal of 25% allocation of new units to meet this idea of "affordable" as set forth by the Pierce County Regional Council, which seems to be in direct conflict to what I understand as Tacoma's goals and image. This approach to "affordable housing" is very unacceptable to me. The hilltop area has always been culturally diverse and vibrant with minorities, and the current development plans undertaken by the city will ultimately push all of these people out, only to make way for more affluent individuals. As new units are built they will be at market rate prices, intended only for those that exceed the "affordable housing" income levels. This will quickly increase the rental- rates of the current units, and I believe the goal of 25% of "total housing units in Hilltop shall be affordable to households earning up to 80 percent of the countywide median income" (Hilltop Subarea Plan) will be reached and surpassed relatively fast.

The Hilltop Subarea Plan suggests establishing an "affordable housing monitoring system for the Hilltop Mixed-Use Center," and exploring the "creation of a system that activates policies and regulations designed to promote the production of new affordable housing when affordability trends project a future shortfall," which I believe to be of extremely high importance as the city is increasing its development activities within this neighborhood. It is also important who leads these projects and the representation of a diverse selection of current residents within the organization itself, not the business interests or outside entities.

The Hilltop Subarea Plan contains directives for establishing "effective public information and feedback materials and conduct frequent town halls, public open houses, and other events at locations in the Hilltop Subarea to encourage public access and facilitate dialogue on Hilltop Subarea Plan implementation priorities, policies, programs, projects, and budgets" and I believe it is important to make this happen immediately. The outreach conducted in preparation of the Hilltop Subarea Plan was noted to "reflect more of the ideas of people who live outside of the area that the plan is trying to attract rather than current residents" (Tom Beckwith, MLK Subarea Plan and EIS Working Group Meeting – November 8, 2012) so I have very deep concerns about whether the city is genuine in addressing the concerns of the current residents.

The groups such as Hilltop Business District Association, Central Neighborhood Council, and Hilltop Action Coalition that the city currently works with represent the needs of a very small selection of residents in the community with interests other than affordable housing, and I think the planning commission needs to do much better at getting more fruitful input from the actual residents of Hilltop.

Phone Number 253)318-5720
Address 813 S. Sheridan Ave #B
Email PatriciaZeeck@gmail.com

RE: Planning Commission accepting feedback until February 24th.

Planning Commission meetings:
February 5th - 4pm
February 19th – 4pm
March 5th – 4pm
March 19th – 4pm

Brian Boudet - Urban Planner
Planning and Development Services Departmen
747 Market Street
Room 345
Tacoma, WA 98402
Phone: (253) 573-2389
Fax: (253) 591-5443
planning@cityoftacoma.org

Dear Mr. Boudet,

My name is Harold Lidren and I am a resident of the hilltop area that is deeply concerned with the current development of this area. My biggest concern is that housing will no longer be affordable for me and quickly displace my family. The city has adopted a view that "affordable housing" is based on a person/family making 80% of the county-wide median income, specifically $40,150 for a single person and $57,350 for a family of four. The number of people who currently live in this area that meet that income level is extremely low. Additionally, the city is choosing to adopt the very minimum goal of 25% allocation of new units to meet this idea of "affordable" as set forth by the Pierce County Regional Council, which seems to be in direct conflict to what I understand as Tacoma's goals and image. This approach to "affordable housing" is very unacceptable to me. The hilltop area has always been culturally diverse and vibrant with minorities, and the current development plans undertaken by the city will ultimately push all of these people out, only to make way for more affluent individuals. As new units are built they will be at market rate prices, intended only for those that exceed the "affordable housing" income levels. This will quickly increase the rental- rates of the current units, and I believe the goal of 25% of "total housing units in Hilltop shall be affordable to households earning up to 80 percent of the countywide median income" (Hilltop Subarea Plan) will be reached and surpassed relatively fast.

The Hilltop Subarea Plan suggests establishing an "affordable housing monitoring system for the Hilltop Mixed-Use Center," and exploring the "creation of a system that activates policies and regulations designed to promote the production of new affordable housing when affordability trends project a future shortfall," which I believe to be of extremely high importance as the city is increasing its development activities within this neighborhood. It is also important who leads these projects and the representation of a diverse selection of current residents within the organization itself, not the business interests or outside entities.

The Hilltop Subarea Plan contains directives for establishing "effective public information and feedback materials and conduct frequent town halls, public open houses, and other events at locations in the Hilltop Subarea to encourage public access and facilitate dialogue on Hilltop Subarea Plan implementation priorities, policies, programs, projects, and budgets" and I believe it is important to make this happen immediately. The outreach conducted in preparation of the Hilltop Subarea Plan was noted to "reflect more of the ideas of people who live outside of the area that the plan is trying to attract rather than current residents" (Tom Beckwith, MLK Subarea Plan and EIS Working Group Meeting – November 8, 2012) so I have very deep concerns about whether the city is genuine in addressing the concerns of the current residents.

The groups such as Hilltop Business District Association, Central Neighborhood Council, and Hilltop Action Coalition that the city currently works with represent the needs of a very small selection of residents in the community with interests other than affordable housing, and I think the planning commission needs to do much better at getting more fruitful input from the actual residents of Hilltop.

Harold Lidren
Phone Number 206 643-2388
Address 1301 S 8th St Apt B
Email Tacoma Wa 98405

RE: Planning Commission accepting feedback until February 24th.

Planning Commission meetings:
February 5th - 4pm
February 19th – 4pm
March 5th – 4pm
March 19th – 4pm

Brian Boudet - Urban Planner
Planning and Development Services Departmen
747 Market Street
Room 345
Tacoma, WA 98402
Phone: (253) 573-2389
Fax: (253) 591-5443
planning@cityoftacoma.org

Dear Mr. Boudet,

My name is Timothy Swindall and I am a resident of the hilltop area that is deeply concerned with the current development of this area. My biggest concern is that housing will no longer be affordable for me and quickly displace my family. The city has adopted a view that "affordable housing" is based on a person/family making 80% of the county-wide median income, specifically $40,150 for a single person and $57,350 for a family of four. The number of people who currently live in this area that meet that income level is extremely low. Additionally, the city is choosing to adopt the very minimum goal of 25% allocation of new units to meet this idea of "affordable" as set forth by the Pierce County Regional Council, which seems to be in direct conflict to what I understand as Tacoma's goals and image. This approach to "affordable housing" is very unacceptable to me. The hilltop area has always been culturally diverse and vibrant with minorities, and the current development plans undertaken by the city will ultimately push all of these people out, only to make way for more affluent individuals. As new units are built they will be at market rate prices, intended only for those that exceed the "affordable housing" income levels. This will quickly increase the rental- rates of the current units, and I believe the goal of 25% of "total housing units in Hilltop shall be affordable to households earning up to 80 percent of the countywide median income" (Hilltop Subarea Plan) will be reached and surpassed relatively fast.

The Hilltop Subarea Plan suggests establishing an "affordable housing monitoring system for the Hilltop Mixed-Use Center," and exploring the "creation of a system that activates policies and regulations designed to promote the production of new affordable housing when affordability trends project a future shortfall," which I believe to be of extremely high importance as the city is increasing its development activities within this neighborhood. It is also important who leads these projects and the representation of a diverse selection of current residents within the organization itself, not the business interests or outside entities.

The Hilltop Subarea Plan contains directives for establishing "effective public information and feedback materials and conduct frequent town halls, public open houses, and other events at locations in the Hilltop Subarea to encourage public access and facilitate dialogue on Hilltop Subarea Plan implementation priorities, policies, programs, projects, and budgets" and I believe it is important to make this happen immediately. The outreach conducted in preparation of the Hilltop Subarea Plan was noted to "reflect more of the ideas of people who live outside of the area that the plan is trying to attract rather than current residents" (Tom Beckwith, MLK Subarea Plan and EIS Working Group Meeting – November 8, 2012) so I have very deep concerns about whether the city is genuine in addressing the concerns of the current residents.

The groups such as Hilltop Business District Association, Central Neighborhood Council, and Hilltop Action Coalition that the city currently works with represent the needs of a very small selection of residents in the community with interests other than affordable housing, and I think the planning commission needs to do much better at getting more fruitful input from the actual residents of Hilltop.

Phone Number 253 2098745
Address 1612 S L St
Email

RE: Planning Commission accepting feedback until February 24th.

Planning Commission meetings:
February 5th - 4pm
February 19th – 4pm
March 5th – 4pm
March 19th – 4pm

Brian Boudet - Urban Planner
Planning and Development Services Departmen
747 Market Street
Room 345
Tacoma, WA 98402
Phone: (253) 573-2389
Fax: (253) 591-5443
planning@cityoftacoma.org

Dear Mr. Boudet,

My name is Alton B. Sierra and I am a resident of the hilltop area that is deeply concerned with the current development of this area. My biggest concern is that housing will no longer be affordable for me and quickly displace my family. The city has adopted a view that "affordable housing" is based on a person/family making 80% of the county-wide median income, specifically $40,150 for a single person and $57,350 for a family of four. The number of people who currently live in this area that meet that income level is extremely low. Additionally, the city is choosing to adopt the very minimum goal of 25% allocation of new units to meet this idea of "affordable" as set forth by the Pierce County Regional Council, which seems to be in direct conflict to what I understand as Tacoma's goals and image. This approach to "affordable housing" is very unacceptable to me. The hilltop area has always been culturally diverse and vibrant with minorities, and the current development plans undertaken by the city will ultimately push all of these people out, only to make way for more affluent individuals. As new units are built they will be at market rate prices, intended only for those that exceed the "affordable housing" income levels. This will quickly increase the rental- rates of the current units, and I believe the goal of 25% of "total housing units in Hilltop shall be affordable to households earning up to 80 percent of the countywide median income" (Hilltop Subarea Plan) will be reached and surpassed relatively fast.

The Hilltop Subarea Plan suggests establishing an "affordable housing monitoring system for the Hilltop Mixed-Use Center," and exploring the "creation of a system that activates policies and regulations designed to promote the production of new affordable housing when affordability trends project a future shortfall," which I believe to be of extremely high importance as the city is increasing its development activities within this neighborhood. It is also important who leads these projects and the representation of a diverse selection of current residents within the organization itself, not the business interests or outside entities.

The Hilltop Subarea Plan contains directives for establishing "effective public information and feedback materials and conduct frequent town halls, public open houses, and other events at locations in the Hilltop Subarea to encourage public access and facilitate dialogue on Hilltop Subarea Plan implementation priorities, policies, programs, projects, and budgets" and I believe it is important to make this happen immediately. The outreach conducted in preparation of the Hilltop Subarea Plan was noted to "reflect more of the ideas of people who live outside of the area that the plan is trying to attract rather than current residents" (Tom Beckwith, MLK Subarea Plan and EIS Working Group Meeting – November 8, 2012) so I have very deep concerns about whether the city is genuine in addressing the concerns of the current residents.

The groups such as Hilltop Business District Association, Central Neighborhood Council, and Hilltop Action Coalition that the city currently works with represent the needs of a very small selection of residents in the community with interests other than affordable housing, and I think the planning commission needs to do much better at getting more fruitful input from the actual residents of Hilltop.

Phone Number
Address 608 N. L St
Email absierra18@gmail.com

RE: Planning Commission accepting feedback until February 1st.

Planning Commission meetings:
February 5th - 4pm
February 19th – 4pm
March 5th – 4pm
March 19th – 4pm

Brian Boudet - Urban Planner
Planning and Development Services Departmen
747 Market Street
Room 345
Tacoma, WA 98402
Phone: (253) 573-2389
Fax: (253) 591-5443
planning@cityoftacoma.org

Dear Mr. Boudet,

My name is Dustin Hellman and I am a resident of the hilltop area that is deeply concerned with the current development of this area. My biggest concern is that housing will no longer be affordable for me and quickly displace my family. The city has adopted a view that "affordable housing" is based on a person/family making 80% of the county-wide median income, specifically $40,150 for a single person and $57,350 for a family of four. The number of people who currently live in this area that meet that income level is extremely low. Additionally, the city is choosing to adopt the very minimum goal of 25% allocation of new units to meet this idea of "affordable" as set forth by the Pierce County Regional Council, which seems to be in direct conflict to what I understand as Tacoma's goals and image. This approach to "affordable housing" is very unacceptable to me. The hilltop area has always been culturally diverse and vibrant with minorities, and the current development plans undertaken by the city will ultimately push all of these people out, only to make way for more affluent individuals. As new units are built they will be at market rate prices, intended only for those that exceed the "affordable housing" income levels. This will quickly increase the rental-rates of the current units, and I believe the goal of 25% of "total housing units in Hilltop shall be affordable to households earning up to 80 percent of the countywide median income" (Hilltop Subarea Plan) will be reached and surpassed relatively fast.

The Hilltop Subarea Plan suggests establishing an "affordable housing monitoring system for the Hilltop Mixed-Use Center," and exploring the "creation of a system that activates policies and regulations designed to promote the production of new affordable housing when affordability trends project a future shortfall," which I believe to be of extremely high importance as the city is increasing its development activities within this neighborhood. It is also important who leads these projects and the representation of a diverse selection of current residents within the organization itself, not the business interests or outside entities.

The Hilltop Subarea Plan contains directives for establishing "effective public information and feedback materials and conduct frequent town halls, public open houses, and other events at locations in the Hilltop Subarea to encourage public access and facilitate dialogue on Hilltop Subarea Plan implementation priorities, policies, programs, projects, and budgets" and I believe it is important to make this happen immediately. The outreach conducted in preparation of the Hilltop Subarea Plan was noted to "reflect more of the ideas of people who live outside of the area that the plan is trying to attract rather than current residents" (Tom Beckwith, MLK Subarea Plan and EIS Working Group Meeting – November 8, 2012) so I have very deep concerns about whether the city is genuine in addressing the concerns of the current residents.

The groups such as Hilltop Business District Association, Central Neighborhood Council, and Hilltop Action Coalition that the city currently works with represent the needs of a very small selection of residents in the community with interests other than affordable housing, and I think the planning commission needs to do much better at getting more fruitful input from the actual residents of Hilltop.

Phone Number
~~Address~~
Email kand1rave3r@gmail.com
address: 1320 S 7th st

RE: Planning Commission accepting feedback until February 1st.

Planning Commission meetings:
February 5th - 4pm
February 19th – 4pm
March 5th – 4pm
March 19th – 4pm

Brian Boudet - Urban Planner
Planning and Development Services Departmen
747 Market Street
Room 345
Tacoma, WA 98402
Phone: (253) 573-2389
Fax: (253) 591-5443
planning@cityoftacoma.org

Dear Mr. Boudet,

My name is Kelly Vinsant and I am a resident of the hilltop area that is deeply concerned with the current development of this area. My biggest concern is that housing will no longer be affordable for me and quickly displace my family. The city has adopted a view that "affordable housing" is based on a person/family making 80% of the county-wide median income, specifically $40,150 for a single person and $57,350 for a family of four. The number of people who currently live in this area that meet that income level is extremely low. Additionally, the city is choosing to adopt the very minimum goal of 25% allocation of new units to meet this idea of "affordable" as set forth by the Pierce County Regional Council, which seems to be in direct conflict to what I understand as Tacoma's goals and image. This approach to "affordable housing" is very unacceptable to me. The hilltop area has always been culturally diverse and vibrant with minorities, and the current development plans undertaken by the city will ultimately push all of these people out, only to make way for more affluent individuals. As new units are built they will be at market rate prices, intended only for those that exceed the "affordable housing" income levels. This will quickly increase the rental-rates of the current units, and I believe the goal of 25% of "total housing units in Hilltop shall be affordable to households earning up to 80 percent of the countywide median income" (Hilltop Subarea Plan) will be reached and surpassed relatively fast.

The Hilltop Subarea Plan suggests establishing an "affordable housing monitoring system for the Hilltop Mixed-Use Center," and exploring the "creation of a system that activates policies and regulations designed to promote the production of new affordable housing when affordability trends project a future shortfall," which I believe to be of extremely high importance as the city is increasing its development activities within this neighborhood. It is also important who leads these projects and the representation of a diverse selection of current residents within the organization itself, not the business interests or outside entities.

The Hilltop Subarea Plan contains directives for establishing "effective public information and feedback materials and conduct frequent town halls, public open houses, and other events at locations in the Hilltop Subarea to encourage public access and facilitate dialogue on Hilltop Subarea Plan implementation priorities, policies, programs, projects, and budgets" and I believe it is important to make this happen immediately. The outreach conducted in preparation of the Hilltop Subarea Plan was noted to "reflect more of the ideas of people who live outside of the area that the plan is trying to attract rather than current residents" (Tom Beckwith, MLK Subarea Plan and EIS Working Group Meeting – November 8, 2012) so I have very deep concerns about whether the city is genuine in addressing the concerns of the current residents.

The groups such as Hilltop Business District Association, Central Neighborhood Council, and Hilltop Action Coalition that the city currently works with represent the needs of a very small selection of residents in the community with interests other than affordable housing, and I think the planning commission needs to do much better at getting more fruitful input from the actual residents of Hilltop.

Phone Number 253-625-6528
Address
Email

RE: Planning Commission accepting feedback until February 1st.

Planning Commission meetings:
February 5th - 4pm
February 19th – 4pm
March 5th – 4pm
March 19th – 4pm

Brian Boudet - Urban Planner
Planning and Development Services Departmen
747 Market Street
Room 345
Tacoma, WA 98402
Phone: (253) 573-2389
Fax: (253) 591-5443
planning@cityoftacoma.org

Dear Mr. Boudet,

My name is PAUL MARSHALL and I am a resident of the hilltop area that is deeply concerned with the current development of this area. My biggest concern is that housing will no longer be affordable for me and quickly displace my family. The city has adopted a view that "affordable housing" is based on a person/family making 80% of the county-wide median income, specifically $40,150 for a single person and $57,350 for a family of four. The number of people who currently live in this area that meet that income level is extremely low. Additionally, the city is choosing to adopt the very minimum goal of 25% allocation of new units to meet this idea of "affordable" as set forth by the Pierce County Regional Council, which seems to be in direct conflict to what I understand as Tacoma's goals and image. This approach to "affordable housing" is very unacceptable to me. The hilltop area has always been culturally diverse and vibrant with minorities, and the current development plans undertaken by the city will ultimately push all of these people out, only to make way for more affluent individuals. As new units are built they will be at market rate prices, intended only for those that exceed the "affordable housing" income levels. This will quickly increase the rental-rates of the current units, and I believe the goal of 25% of "total housing units in Hilltop shall be affordable to households earning up to 80 percent of the countywide median income" (Hilltop Subarea Plan) will be reached and surpassed relatively fast.

The Hilltop Subarea Plan suggests establishing an "affordable housing monitoring system for the Hilltop Mixed-Use Center," and exploring the "creation of a system that activates policies and regulations designed to promote the production of new affordable housing when affordability trends project a future shortfall," which I believe to be of extremely high importance as the city is increasing its development activities within this neighborhood. It is also important who leads these projects and the representation of a diverse selection of current residents within the organization itself, not the business interests or outside entities.

The Hilltop Subarea Plan contains directives for establishing "effective public information and feedback materials and conduct frequent town halls, public open houses, and other events at locations in the Hilltop Subarea to encourage public access and facilitate dialogue on Hilltop Subarea Plan implementation priorities, policies, programs, projects, and budgets" and I believe it is important to make this happen immediately. The outreach conducted in preparation of the Hilltop Subarea Plan was noted to "reflect more of the ideas of people who live outside of the area that the plan is trying to attract rather than current residents" (Tom Beckwith, MLK Subarea Plan and EIS Working Group Meeting – November 8, 2012) so I have very deep concerns about whether the city is genuine in addressing the concerns of the current residents.

The groups such as Hilltop Business District Association, Central Neighborhood Council, and Hilltop Action Coalition that the city currently works with represent the needs of a very small selection of residents in the community with interests other than affordable housing, and I think the planning commission needs to do much better at getting more fruitful input from the actual residents of Hilltop.

Phone Number 253.301.4037
Address 1312 SOUTH 7TH ST.
Email pmarshall7943@yahoo.com

RE: Planning Commission accepting feedback until February 1st.

Planning Commission meetings:
February 5th - 4pm
February 19th – 4pm
March 5th – 4pm
March 19th – 4pm

Brian Boudet - Urban Planner
Planning and Development Services Departmen
747 Market Street
Room 345
Tacoma, WA 98402
Phone: (253) 573-2389
Fax: (253) 591-5443
planning@cityoftacoma.org

Dear Mr. Boudet,

My name is Paul D Kammerzell and I am a resident of the hilltop area that is deeply concerned with the current development of this area. My biggest concern is that housing will no longer be affordable for me and quickly displace my family. The city has adopted a view that "affordable housing" is based on a person/family making 80% of the county-wide median income, specifically $40,150 for a single person and $57,350 for a family of four. The number of people who currently live in this area that meet that income level is extremely low. Additionally, the city is choosing to adopt the very minimum goal of 25% allocation of new units to meet this idea of "affordable" as set forth by the Pierce County Regional Council, which seems to be in direct conflict to what I understand as Tacoma's goals and image. This approach to "affordable housing" is very unacceptable to me. The hilltop area has always been culturally diverse and vibrant with minorities, and the current development plans undertaken by the city will ultimately push all of these people out, only to make way for more affluent individuals. As new units are built they will be at market rate prices, intended only for those that exceed the "affordable housing" income levels. This will quickly increase the rental-rates of the current units, and I believe the goal of 25% of "total housing units in Hilltop shall be affordable to households earning up to 80 percent of the countywide median income" (Hilltop Subarea Plan) will be reached and surpassed relatively fast.

The Hilltop Subarea Plan suggests establishing an "affordable housing monitoring system for the Hilltop Mixed-Use Center," and exploring the "creation of a system that activates policies and regulations designed to promote the production of new affordable housing when affordability trends project a future shortfall," which I believe to be of extremely high importance as the city is increasing its development activities within this neighborhood. It is also important who leads these projects and the representation of a diverse selection of current residents within the organization itself, not the business interests or outside entities.

The Hilltop Subarea Plan contains directives for establishing "effective public information and feedback materials and conduct frequent town halls, public open houses, and other events at locations in the Hilltop Subarea to encourage public access and facilitate dialogue on Hilltop Subarea Plan implementation priorities, policies, programs, projects, and budgets" and I believe it is important to make this happen immediately. The outreach conducted in preparation of the Hilltop Subarea Plan was noted to "reflect more of the ideas of people who live outside of the area that the plan is trying to attract rather than current residents" (Tom Beckwith, MLK Subarea Plan and EIS Working Group Meeting – November 8, 2012) so I have very deep concerns about whether the city is genuine in addressing the concerns of the current residents.

The groups such as Hilltop Business District Association, Central Neighborhood Council, and Hilltop Action Coalition that the city currently works with represent the needs of a very small selection of residents in the community with interests other than affordable housing, and I think the planning commission needs to do much better at getting more fruitful input from the actual residents of Hilltop.

Phone Number 253-272-8453
Address 1304 5.7th St. #C, Tacoma 98405
Email

RE: Planning Commission accepting feedback until February 1st.

Planning Commission meetings:
February 5th - 4pm
February 19th – 4pm
March 5th – 4pm
March 19th – 4pm

Brian Boudet - Urban Planner
Planning and Development Services Departmen
747 Market Street
Room 345
Tacoma, WA 98402
Phone: (253) 573-2389
Fax: (253) 591-5443
planning@cityoftacoma.org

Dear Mr. Boudet,

My name is and I am a resident of the hilltop area that is deeply concerned with the current development of this area. My biggest concern is that housing will no longer be affordable for me and quickly displace my family. The city has adopted a view that "affordable housing" is based on a person/family making 80% of the county-wide median income, specifically $40,150 for a single person and $57,350 for a family of four. The number of people who currently live in this area that meet that income level is extremely low. Additionally, the city is choosing to adopt the very minimum goal of 25% allocation of new units to meet this idea of "affordable" as set forth by the Pierce County Regional Council, which seems to be in direct conflict to what I understand as Tacoma's goals and image. This approach to "affordable housing" is very unacceptable to me. The hilltop area has always been culturally diverse and vibrant with minorities, and the current development plans undertaken by the city will ultimately push all of these people out, only to make way for more affluent individuals. As new units are built they will be at market rate prices, intended only for those that exceed the "affordable housing" income levels. This will quickly increase the rental-rates of the current units, and I believe the goal of 25% of "total housing units in Hilltop shall be affordable to households earning up to 80 percent of the countywide median income" (Hilltop Subarea Plan) will be reached and surpassed relatively fast.

The Hilltop Subarea Plan suggests establishing an "affordable housing monitoring system for the Hilltop Mixed-Use Center," and exploring the "creation of a system that activates policies and regulations designed to promote the production of new affordable housing when affordability trends project a future shortfall," which I believe to be of extremely high importance as the city is increasing its development activities within this neighborhood. It is also important who leads these projects and the representation of a diverse selection of current residents within the organization itself, not the business interests or outside entities.

The Hilltop Subarea Plan contains directives for establishing "effective public information and feedback materials and conduct frequent town halls, public open houses, and other events at locations in the Hilltop Subarea to encourage public access and facilitate dialogue on Hilltop Subarea Plan implementation priorities, policies, programs, projects, and budgets" and I believe it is important to make this happen immediately. The outreach conducted in preparation of the Hilltop Subarea Plan was noted to "reflect more of the ideas of people who live outside of the area that the plan is trying to attract rather than current residents" (Tom Beckwith, MLK Subarea Plan and EIS Working Group Meeting – November 8, 2012) so I have very deep concerns about whether the city is genuine in addressing the concerns of the current residents.

The groups such as Hilltop Business District Association, Central Neighborhood Council, and Hilltop Action Coalition that the city currently works with represent the needs of a very small selection of residents in the community with interests other than affordable housing, and I think the planning commission needs to do much better at getting more fruitful input from the actual residents of Hilltop.

Phone Number
Address
Email

Shannyne Thompson

RE: Planning Commission accepting feedback until February 24th.

Planning Commission meetings:
February 5th - 4pm
February 19th – 4pm
March 5th – 4pm
March 19th – 4pm

Brian Boudet - Urban Planner
Planning and Development Services Departmen
747 Market Street
Room 345
Tacoma, WA 98402
Phone: (253) 573-2389
Fax: (253) 591-5443
planning@cityoftacoma.org

Dear Mr. Boudet,

My name is Lori and I am a resident of the hilltop area that is deeply concerned with the current development of this area. My biggest concern is that housing will no longer be affordable for me and quickly displace my family. The city has adopted a view that "affordable housing" is based on a person/family making 80% of the county-wide median income, specifically $40,150 for a single person and $57,350 for a family of four. The number of people who currently live in this area that meet that income level is extremely low. Additionally, the city is choosing to adopt the very minimum goal of 25% allocation of new units to meet this idea of "affordable" as set forth by the Pierce County Regional Council, which seems to be in direct conflict to what I understand as Tacoma's goals and image. This approach to "affordable housing" is very unacceptable to me. The hilltop area has always been culturally diverse and vibrant with minorities, and the current development plans undertaken by the city will ultimately push all of these people out, only to make way for more affluent individuals. As new units are built they will be at market rate prices, intended only for those that exceed the "affordable housing" income levels. This will quickly increase the rental- rates of the current units, and I believe the goal of 25% of "total housing units in Hilltop shall be affordable to households earning up to 80 percent of the countywide median income" (Hilltop Subarea Plan) will be reached and surpassed relatively fast.

The Hilltop Subarea Plan suggests establishing an "affordable housing monitoring system for the Hilltop Mixed-Use Center," and exploring the "creation of a system that activates policies and regulations designed to promote the production of new affordable housing when affordability trends project a future shortfall," which I believe to be of extremely high importance as the city is increasing its development activities within this neighborhood. It is also important who leads these projects and the representation of a diverse selection of current residents within the organization itself, not the business interests or outside entities.

The Hilltop Subarea Plan contains directives for establishing "effective public information and feedback materials and conduct frequent town halls, public open houses, and other events at locations in the Hilltop Subarea to encourage public access and facilitate dialogue on Hilltop Subarea Plan implementation priorities, policies, programs, projects, and budgets" and I believe it is important to make this happen immediately. The outreach conducted in preparation of the Hilltop Subarea Plan was noted to "reflect more of the ideas of people who live outside of the area that the plan is trying to attract rather than current residents" (Tom Beckwith, MLK Subarea Plan and EIS Working Group Meeting – November 8, 2012) so I have very deep concerns about whether the city is genuine in addressing the concerns of the current residents.

The groups such as Hilltop Business District Association, Central Neighborhood Council, and Hilltop Action Coalition that the city currently works with represent the needs of a very small selection of residents in the community with interests other than affordable housing, and I think the planning commission needs to do much better at getting more fruitful input from the actual residents of Hilltop.

Phone Number 253-579-8239
Address 1401 S M ST #201
Email lori_larkins@yahoo.com

RE: Planning Commission accepting feedback until February 24th.

Planning Commission meetings:
February 5th - 4pm
February 19th – 4pm
March 5th – 4pm
March 19th – 4pm

Brian Boudet - Urban Planner
Planning and Development Services Department
747 Market Street
Room 345
Tacoma, WA 98402
Phone: (253) 573-2389
Fax: (253) 591-5443
planning@cityoftacoma.org

Dear Mr. Boudet,

My name is Jessica Pierce and I am a resident of the hilltop area that is deeply concerned with the current development of this area. My biggest concern is that housing will no longer be affordable for me and quickly displace my family. The city has adopted a view that "affordable housing" is based on a person/family making 80% of the county-wide median income, specifically $40,150 for a single person and $57,350 for a family of four. The number of people who currently live in this area that meet that income level is extremely low. Additionally, the city is choosing to adopt the very minimum goal of 25% allocation of new units to meet this idea of "affordable" as set forth by the Pierce County Regional Council, which seems to be in direct conflict to what I understand as Tacoma's goals and image. This approach to "affordable housing" is very unacceptable to me. The hilltop area has always been culturally diverse and vibrant with minorities, and the current development plans undertaken by the city will ultimately push all of these people out, only to make way for more affluent individuals. As new units are built they will be at market rate prices, intended only for those that exceed the "affordable housing" income levels. This will quickly increase the rental- rates of the current units, and I believe the goal of 25% of "total housing units in Hilltop shall be affordable to households earning up to 80 percent of the countywide median income" (Hilltop Subarea Plan) will be reached and surpassed relatively fast.

The Hilltop Subarea Plan suggests establishing an "affordable housing monitoring system for the Hilltop Mixed-Use Center," and exploring the "creation of a system that activates policies and regulations designed to promote the production of new affordable housing when affordability trends project a future shortfall," which I believe to be of extremely high importance as the city is increasing its development activities within this neighborhood. It is also important who leads these projects and the representation of a diverse selection of current residents within the organization itself, not the business interests or outside entities.

The Hilltop Subarea Plan contains directives for establishing "effective public information and feedback materials and conduct frequent town halls, public open houses, and other events at locations in the Hilltop Subarea to encourage public access and facilitate dialogue on Hilltop Subarea Plan implementation priorities, policies, programs, projects, and budgets" and I believe it is important to make this happen immediately. The outreach conducted in preparation of the Hilltop Subarea Plan was noted to "reflect more of the ideas of people who live outside of the area that the plan is trying to attract rather than current residents" (Tom Beckwith, MLK Subarea Plan and EIS Working Group Meeting – November 8, 2012) so I have very deep concerns about whether the city is genuine in addressing the concerns of the current residents.

The groups such as Hilltop Business District Association, Central Neighborhood Council, and Hilltop Action Coalition that the city currently works with represent the needs of a very small selection of residents in the community with interests other than affordable housing, and I think the planning commission needs to do much better at getting more fruitful input from the actual residents of Hilltop.

Phone Number 253-495-4780
Address 811 S. M St Tacoma WA
Email pierce.jessica@yahoo.com

RE: Planning Commission accepting feedback until February 24th.

Planning Commission meetings:
February 5th - 4pm
February 19th – 4pm
March 5th – 4pm
March 19th – 4pm

Brian Boudet - Urban Planner
Planning and Development Services Departmen
747 Market Street
Room 345
Tacoma, WA 98402
Phone: (253) 573-2389
Fax: (253) 591-5443
planning@cityoftacoma.org

Dear Mr. Boudet,

My name is and I am a resident of the hilltop area that is deeply concerned with the current development of this area. My biggest concern is that housing will no longer be affordable for me and quickly displace my family. The city has adopted a view that "affordable housing" is based on a person/family making 80% of the county-wide median income, specifically $40,150 for a single person and $57,350 for a family of four. The number of people who currently live in this area that meet that income level is extremely low. Additionally, the city is choosing to adopt the very minimum goal of 25% allocation of new units to meet this idea of "affordable" as set forth by the Pierce County Regional Council, which seems to be in direct conflict to what I understand as Tacoma's goals and image. This approach to "affordable housing" is very unacceptable to me. The hilltop area has always been culturally diverse and vibrant with minorities, and the current development plans undertaken by the city will ultimately push all of these people out, only to make way for more affluent individuals. As new units are built they will be at market rate prices, intended only for those that exceed the "affordable housing" income levels. This will quickly increase the rental- rates of the current units, and I believe the goal of 25% of "total housing units in Hilltop shall be affordable to households earning up to 80 percent of the countywide median income" (Hilltop Subarea Plan) will be reached and surpassed relatively fast.

The Hilltop Subarea Plan suggests establishing an "affordable housing monitoring system for the Hilltop Mixed-Use Center," and exploring the "creation of a system that activates policies and regulations designed to promote the production of new affordable housing when affordability trends project a future shortfall," which I believe to be of extremely high importance as the city is increasing its development activities within this neighborhood. It is also important who leads these projects and the representation of a diverse selection of current residents within the organization itself, not the business interests or outside entities.

The Hilltop Subarea Plan contains directives for establishing "effective public information and feedback materials and conduct frequent town halls, public open houses, and other events at locations in the Hilltop Subarea to encourage public access and facilitate dialogue on Hilltop Subarea Plan implementation priorities, policies, programs, projects, and budgets" and I believe it is important to make this happen immediately. The outreach conducted in preparation of the Hilltop Subarea Plan was noted to "reflect more of the ideas of people who live outside of the area that the plan is trying to attract rather than current residents" (Tom Beckwith, MLK Subarea Plan and EIS Working Group Meeting – November 8, 2012) so I have very deep concerns about whether the city is genuine in addressing the concerns of the current residents.

The groups such as Hilltop Business District Association, Central Neighborhood Council, and Hilltop Action Coalition that the city currently works with represent the needs of a very small selection of residents in the community with interests other than affordable housing, and I think the planning commission needs to do much better at getting more fruitful input from the actual residents of Hilltop.

Phone Number (253) 228-9246
Address 811 South M St Apt. 43
Tacoma, WA 98405
Email marymight.mh@gmail.com

Mary Hilliard

RE: Planning Commission accepting feedback until February 24th.

Planning Commission meetings:
February 5th - 4pm
February 19th – 4pm
March 5th – 4pm
March 19th – 4pm

Brian Boudet - Urban Planner
Planning and Development Services Departmen
747 Market Street
Room 345
Tacoma, WA 98402
Phone: (253) 573-2389
Fax: (253) 591-5443
planning@cityoftacoma.org

Dear Mr. Boudet (Equity Inskeep)

My name is Equity Inskeep and I am a resident of the hilltop area that is deeply concerned with the current development of this area. My biggest concern is that housing will no longer be affordable for me and quickly displace my family. The city has adopted a view that "affordable housing" is based on a person/family making 80% of the county-wide median income, specifically $40,150 for a single person and $57,350 for a family of four. The number of people who currently live in this area that meet that income level is extremely low. Additionally, the city is choosing to adopt the very minimum goal of 25% allocation of new units to meet this idea of "affordable" as set forth by the Pierce County Regional Council, which seems to be in direct conflict to what I understand as Tacoma's goals and image. This approach to "affordable housing" is very unacceptable to me. The hilltop area has always been culturally diverse and vibrant with minorities, and the current development plans undertaken by the city will ultimately push all of these people out, only to make way for more affluent individuals. As new units are built they will be at market rate prices, intended only for those that exceed the "affordable housing" income levels. This will quickly increase the rental- rates of the current units, and I believe the goal of 25% of "total housing units in Hilltop shall be affordable to households earning up to 80 percent of the countywide median income" (Hilltop Subarea Plan) will be reached and surpassed relatively fast.

The Hilltop Subarea Plan suggests establishing an "affordable housing monitoring system for the Hilltop Mixed-Use Center," and exploring the "creation of a system that activates policies and regulations designed to promote the production of new affordable housing when affordability trends project a future shortfall," which I believe to be of extremely high importance as the city is increasing its development activities within this neighborhood. It is also important who leads these projects and the representation of a diverse selection of current residents within the organization itself, not the business interests or outside entities.

The Hilltop Subarea Plan contains directives for establishing "effective public information and feedback materials and conduct frequent town halls, public open houses, and other events at locations in the Hilltop Subarea to encourage public access and facilitate dialogue on Hilltop Subarea Plan implementation priorities, policies, programs, projects, and budgets" and I believe it is important to make this happen immediately. The outreach conducted in preparation of the Hilltop Subarea Plan was noted to "reflect more of the ideas of people who live outside of the area that the plan is trying to attract rather than current residents" (Tom Beckwith, MLK Subarea Plan and EIS Working Group Meeting – November 8, 2012) so I have very deep concerns about whether the city is genuine in addressing the concerns of the current residents.

The groups such as Hilltop Business District Association, Central Neighborhood Council, and Hilltop Action Coalition that the city currently works with represent the needs of a very small selection of residents in the community with interests other than affordable housing, and I think the planning commission needs to do much better at getting more fruitful input from the actual residents of Hilltop.

Phone Number 253 861 6476
Address ~~Sub~~ 1301 S 9th St
Email sabrinzgirl@yahoo.com

RE: Planning Commission accepting feedback until February 24th.

Planning Commission meetings:
February 5th - 4pm
February 19th – 4pm
March 5th – 4pm
March 19th – 4pm

Brian Boudet - Urban Planner
Planning and Development Services Department
747 Market Street
Room 345
Tacoma, WA 98402
Phone: (253) 573-2389
Fax: (253) 591-5443
planning@cityoftacoma.org

Dear Mr. Boudet, Antione Larkins

My name is and I am a resident of the hilltop area that is deeply concerned with the current development of this area. My biggest concern is that housing will no longer be affordable for me and quickly displace my family. The city has adopted a view that "affordable housing" is based on a person/family making 80% of the county-wide median income, specifically $40,150 for a single person and $57,350 for a family of four. The number of people who currently live in this area that meet that income level is extremely low. Additionally, the city is choosing to adopt the very minimum goal of 25% allocation of new units to meet this idea of "affordable" as set forth by the Pierce County Regional Council, which seems to be in direct conflict to what I understand as Tacoma's goals and image. This approach to "affordable housing" is very unacceptable to me. The hilltop area has always been culturally diverse and vibrant with minorities, and the current development plans undertaken by the city will ultimately push all of these people out, only to make way for more affluent individuals. As new units are built they will be at market rate prices, intended only for those that exceed the "affordable housing" income levels. This will quickly increase the rental- rates of the current units, and I believe the goal of 25% of "total housing units in Hilltop shall be affordable to households earning up to 80 percent of the countywide median income" (Hilltop Subarea Plan) will be reached and surpassed relatively fast.

The Hilltop Subarea Plan suggests establishing an "affordable housing monitoring system for the Hilltop Mixed-Use Center," and exploring the "creation of a system that activates policies and regulations designed to promote the production of new affordable housing when affordability trends project a future shortfall," which I believe to be of extremely high importance as the city is increasing its development activities within this neighborhood. It is also important who leads these projects and the representation of a diverse selection of current residents within the organization itself, not the business interests or outside entities.

The Hilltop Subarea Plan contains directives for establishing "effective public information and feedback materials and conduct frequent town halls, public open houses, and other events at locations in the Hilltop Subarea to encourage public access and facilitate dialogue on Hilltop Subarea Plan implementation priorities, policies, programs, projects, and budgets" and I believe it is important to make this happen immediately. The outreach conducted in preparation of the Hilltop Subarea Plan was noted to "reflect more of the ideas of people who live outside of the area that the plan is trying to attract rather than current residents" (Tom Beckwith, MLK Subarea Plan and EIS Working Group Meeting – November 8, 2012) so I have very deep concerns about whether the city is genuine in addressing the concerns of the current residents.

The groups such as Hilltop Business District Association, Central Neighborhood Council, and Hilltop Action Coalition that the city currently works with represent the needs of a very small selection of residents in the community with interests other than affordable housing, and I think the planning commission needs to do much better at getting more fruitful input from the actual residents of Hilltop.

Phone Number
Address
Email AntioneLarkins@ymail.com

Antione Larkins

RE: Planning Commission accepting feedback until February 24th.

Planning Commission meetings:
February 5th - 4pm
February 19th – 4pm
March 5th – 4pm
March 19th – 4pm

Brian Boudet - Urban Planner
Planning and Development Services Department
747 Market Street
Room 345
Tacoma, WA 98402
Phone: (253) 573-2389
Fax: (253) 591-5443
planning@cityoftacoma.org

Dear Mr. Boudet,

My name is Seogul Kachin and I am a resident of the hilltop area that is deeply concerned with the current development of this area. My biggest concern is that housing will no longer be affordable for me and quickly displace my family. The city has adopted a view that "affordable housing" is based on a person/family making 80% of the county-wide median income, specifically $40,150 for a single person and $57,350 for a family of four. The number of people who currently live in this area that meet that income level is extremely low. Additionally, the city is choosing to adopt the very minimum goal of 25% allocation of new units to meet this idea of "affordable" as set forth by the Pierce County Regional Council, which seems to be in direct conflict to what I understand as Tacoma's goals and image. This approach to "affordable housing" is very unacceptable to me. The hilltop area has always been culturally diverse and vibrant with minorities, and the current development plans undertaken by the city will ultimately push all of these people out, only to make way for more affluent individuals. As new units are built they will be at market rate prices, intended only for those that exceed the "affordable housing" income levels. This will quickly increase the rental- rates of the current units, and I believe the goal of 25% of "total housing units in Hilltop shall be affordable to households earning up to 80 percent of the countywide median income" (Hilltop Subarea Plan) will be reached and surpassed relatively fast.

The Hilltop Subarea Plan suggests establishing an "affordable housing monitoring system for the Hilltop Mixed-Use Center," and exploring the "creation of a system that activates policies and regulations designed to promote the production of new affordable housing when affordability trends project a future shortfall," which I believe to be of extremely high importance as the city is increasing its development activities within this neighborhood. It is also important who leads these projects and the representation of a diverse selection of current residents within the organization itself, not the business interests or outside entities.

The Hilltop Subarea Plan contains directives for establishing "effective public information and feedback materials and conduct frequent town halls, public open houses, and other events at locations in the Hilltop Subarea to encourage public access and facilitate dialogue on Hilltop Subarea Plan implementation priorities, policies, programs, projects, and budgets" and I believe it is important to make this happen immediately. The outreach conducted in preparation of the Hilltop Subarea Plan was noted to "reflect more of the ideas of people who live outside of the area that the plan is trying to attract rather than current residents" (Tom Beckwith, MLK Subarea Plan and EIS Working Group Meeting – November 8, 2012) so I have very deep concerns about whether the city is genuine in addressing the concerns of the current residents.

The groups such as Hilltop Business District Association, Central Neighborhood Council, and Hilltop Action Coalition that the city currently works with represent the needs of a very small selection of residents in the community with interests other than affordable housing, and I think the planning commission needs to do much better at getting more fruitful input from the actual residents of Hilltop.

Phone Number 253-272-0508
Address 1409 S M Street Tacoma WA/98405 Apt #201
Email

RE: Planning Commission accepting feedback until February 24th.

Planning Commission meetings:
February 5th - 4pm
February 19th – 4pm
March 5th – 4pm
March 19th – 4pm

Brian Boudet - Urban Planner
Planning and Development Services Departmen
747 Market Street
Room 345
Tacoma, WA 98402
Phone: (253) 573-2389
Fax: (253) 591-5443
planning@cityoftacoma.org

Dear Mr. Boudet,

My name is KERRY MORRISSEY and I am a resident of the hilltop area that is deeply concerned with the current development of this area. My biggest concern is that housing will no longer be affordable for me and quickly displace my family. The city has adopted a view that "affordable housing" is based on a person/family making 80% of the county-wide median income, specifically $40,150 for a single person and $57,350 for a family of four. The number of people who currently live in this area that meet that income level is extremely low. Additionally, the city is choosing to adopt the very minimum goal of 25% allocation of new units to meet this idea of "affordable" as set forth by the Pierce County Regional Council, which seems to be in direct conflict to what I understand as Tacoma's goals and image. This approach to "affordable housing" is very unacceptable to me. The hilltop area has always been culturally diverse and vibrant with minorities, and the current development plans undertaken by the city will ultimately push all of these people out, only to make way for more affluent individuals. As new units are built they will be at market rate prices, intended only for those that exceed the "affordable housing" income levels. This will quickly increase the rental- rates of the current units, and I believe the goal of 25% of "total housing units in Hilltop shall be affordable to households earning up to 80 percent of the countywide median income" (Hilltop Subarea Plan) will be reached and surpassed relatively fast.

The Hilltop Subarea Plan suggests establishing an "affordable housing monitoring system for the Hilltop Mixed-Use Center," and exploring the "creation of a system that activates policies and regulations designed to promote the production of new affordable housing when affordability trends project a future shortfall," which I believe to be of extremely high importance as the city is increasing its development activities within this neighborhood. It is also important who leads these projects and the representation of a diverse selection of current residents within the organization itself, not the business interests or outside entities.

The Hilltop Subarea Plan contains directives for establishing "effective public information and feedback materials and conduct frequent town halls, public open houses, and other events at locations in the Hilltop Subarea to encourage public access and facilitate dialogue on Hilltop Subarea Plan implementation priorities, policies, programs, projects, and budgets" and I believe it is important to make this happen immediately. The outreach conducted in preparation of the Hilltop Subarea Plan was noted to "reflect more of the ideas of people who live outside of the area that the plan is trying to attract rather than current residents" (Tom Beckwith, MLK Subarea Plan and EIS Working Group Meeting – November 8, 2012) so I have very deep concerns about whether the city is genuine in addressing the concerns of the current residents.

The groups such as Hilltop Business District Association, Central Neighborhood Council, and Hilltop Action Coalition that the city currently works with represent the needs of a very small selection of residents in the community with interests other than affordable housing, and I think the planning commission needs to do much better at getting more fruitful input from the actual residents of Hilltop.

Phone Number 253 503 7444
Address 1401 S. M. Apt 102 TACOMA WA 98405
Email KerryMorrissey

RE: Planning Commission accepting feedback until February 24th.

Planning Commission meetings:
February 5th - 4pm
February 19th – 4pm
March 5th – 4pm
March 19th – 4pm

Brian Boudet - Urban Planner
Planning and Development Services Departmen
747 Market Street
Room 345
Tacoma, WA 98402
Phone: (253) 573-2389
Fax: (253) 591-5443
planning@cityoftacoma.org

Dear Mr. Boudet,

My name is Marcela Salazar and I am a resident of the hilltop area that is deeply concerned with the current development of this area. My biggest concern is that housing will no longer be affordable for me and quickly displace my family. The city has adopted a view that "affordable housing" is based on a person/family making 80% of the county-wide median income, specifically $40,150 for a single person and $57,350 for a family of four. The number of people who currently live in this area that meet that income level is extremely low. Additionally, the city is choosing to adopt the very minimum goal of 25% allocation of new units to meet this idea of "affordable" as set forth by the Pierce County Regional Council, which seems to be in direct conflict to what I understand as Tacoma's goals and image. This approach to "affordable housing" is very unacceptable to me. The hilltop area has always been culturally diverse and vibrant with minorities, and the current development plans undertaken by the city will ultimately push all of these people out, only to make way for more affluent individuals. As new units are built they will be at market rate prices, intended only for those that exceed the "affordable housing" income levels. This will quickly increase the rental- rates of the current units, and I believe the goal of 25% of "total housing units in Hilltop shall be affordable to households earning up to 80 percent of the countywide median income" (Hilltop Subarea Plan) will be reached and surpassed relatively fast.

The Hilltop Subarea Plan suggests establishing an "affordable housing monitoring system for the Hilltop Mixed-Use Center," and exploring the "creation of a system that activates policies and regulations designed to promote the production of new affordable housing when affordability trends project a future shortfall," which I believe to be of extremely high importance as the city is increasing its development activities within this neighborhood. It is also important who leads these projects and the representation of a diverse selection of current residents within the organization itself, not the business interests or outside entities.

The Hilltop Subarea Plan contains directives for establishing "effective public information and feedback materials and conduct frequent town halls, public open houses, and other events at locations in the Hilltop Subarea to encourage public access and facilitate dialogue on Hilltop Subarea Plan implementation priorities, policies, programs, projects, and budgets" and I believe it is important to make this happen immediately. The outreach conducted in preparation of the Hilltop Subarea Plan was noted to "reflect more of the ideas of people who live outside of the area that the plan is trying to attract rather than current residents" (Tom Beckwith, MLK Subarea Plan and EIS Working Group Meeting – November 8, 2012) so I have very deep concerns about whether the city is genuine in addressing the concerns of the current residents.

The groups such as Hilltop Business District Association, Central Neighborhood Council, and Hilltop Action Coalition that the city currently works with represent the needs of a very small selection of residents in the community with interests other than affordable housing, and I think the planning commission needs to do much better at getting more fruitful input from the actual residents of Hilltop.

Phone Number 425.218.0384
Address 1415 S.M.ST #102 Tacoma 98405
Email marcela_salazar8918@yahoo.com

RE: Planning Commission accepting feedback until February 24th.

Planning Commission meetings:
February 5th - 4pm
February 19th – 4pm
March 5th – 4pm
March 19th – 4pm

Brian Boudet - Urban Planner
Planning and Development Services Department
747 Market Street
Room 345
Tacoma, WA 98402
Phone: (253) 573-2389
Fax: (253) 591-5443
planning@cityoftacoma.org

Dear Mr. Boudet,

My name is JOHN HOABIL and I am a resident of the hilltop area that is deeply concerned with the current development of this area. My biggest concern is that housing will no longer be affordable for me and quickly displace my family. The city has adopted a view that "affordable housing" is based on a person/family making 80% of the county-wide median income, specifically $40,150 for a single person and $57,350 for a family of four. The number of people who currently live in this area that meet that income level is extremely low. Additionally, the city is choosing to adopt the very minimum goal of 25% allocation of new units to meet this idea of "affordable" as set forth by the Pierce County Regional Council, which seems to be in direct conflict to what I understand as Tacoma's goals and image. This approach to "affordable housing" is very unacceptable to me. The hilltop area has always been culturally diverse and vibrant with minorities, and the current development plans undertaken by the city will ultimately push all of these people out, only to make way for more affluent individuals. As new units are built they will be at market rate prices, intended only for those that exceed the "affordable housing" income levels. This will quickly increase the rental- rates of the current units, and I believe the goal of 25% of "total housing units in Hilltop shall be affordable to households earning up to 80 percent of the countywide median income" (Hilltop Subarea Plan) will be reached and surpassed relatively fast.

The Hilltop Subarea Plan suggests establishing an "affordable housing monitoring system for the Hilltop Mixed-Use Center," and exploring the "creation of a system that activates policies and regulations designed to promote the production of new affordable housing when affordability trends project a future shortfall," which I believe to be of extremely high importance as the city is increasing its development activities within this neighborhood. It is also important who leads these projects and the representation of a diverse selection of current residents within the organization itself, not the business interests or outside entities.

The Hilltop Subarea Plan contains directives for establishing "effective public information and feedback materials and conduct frequent town halls, public open houses, and other events at locations in the Hilltop Subarea to encourage public access and facilitate dialogue on Hilltop Subarea Plan implementation priorities, policies, programs, projects, and budgets" and I believe it is important to make this happen immediately. The outreach conducted in preparation of the Hilltop Subarea Plan was noted to "reflect more of the ideas of people who live outside of the area that the plan is trying to attract rather than current residents" (Tom Beckwith, MLK Subarea Plan and EIS Working Group Meeting – November 8, 2012) so I have very deep concerns about whether the city is genuine in addressing the concerns of the current residents.

The groups such as Hilltop Business District Association, Central Neighborhood Council, and Hilltop Action Coalition that the city currently works with represent the needs of a very small selection of residents in the community with interests other than affordable housing, and I think the planning commission needs to do much better at getting more fruitful input from the actual residents of Hilltop.

Phone Number
Address
Email

RE: Planning Commission accepting feedback until February 1st.

Planning Commission meetings:
February 5th - 4pm
February 19th – 4pm
March 5th – 4pm
March 19th – 4pm

Brian Boudet - Urban Planner
Planning and Development Services Departmen
747 Market Street
Room 345
Tacoma, WA 98402
Phone: (253) 573-2389
Fax: (253) 591-5443
planning@cityoftacoma.org

Dear Mr. Boudet,

My name is Whitney Brady and I am a resident of the hilltop area that is deeply concerned with the current development of this area. My biggest concern is that housing will no longer be affordable for me and quickly displace my family. The city has adopted a view that "affordable housing" is based on a person/family making 80% of the county-wide median income, specifically $40,150 for a single person and $57,350 for a family of four. The number of people who currently live in this area that meet that income level is extremely low. Additionally, the city is choosing to adopt the very minimum goal of 25% allocation of new units to meet this idea of "affordable" as set forth by the Pierce County Regional Council, which seems to be in direct conflict to what I understand as Tacoma's goals and image. This approach to "affordable housing" is very unacceptable to me. The hilltop area has always been culturally diverse and vibrant with minorities, and the current development plans undertaken by the city will ultimately push all of these people out, only to make way for more affluent individuals. As new units are built they will be at market rate prices, intended only for those that exceed the "affordable housing" income levels. This will quickly increase the rental- rates of the current units, and I believe the goal of 25% of "total housing units in Hilltop shall be affordable to households earning up to 80 percent of the countywide median income" (Hilltop Subarea Plan) will be reached and surpassed relatively fast.

The Hilltop Subarea Plan suggests establishing an "affordable housing monitoring system for the Hilltop Mixed-Use Center," and exploring the "creation of a system that activates policies and regulations designed to promote the production of new affordable housing when affordability trends project a future shortfall," which I believe to be of extremely high importance as the city is increasing its development activities within this neighborhood. It is also important who leads these projects and the representation of a diverse selection of current residents within the organization itself, not the business interests or outside entities.

The Hilltop Subarea Plan contains directives for establishing "effective public information and feedback materials and conduct frequent town halls, public open houses, and other events at locations in the Hilltop Subarea to encourage public access and facilitate dialogue on Hilltop Subarea Plan implementation priorities, policies, programs, projects, and budgets" and I believe it is important to make this happen immediately. The outreach conducted in preparation of the Hilltop Subarea Plan was noted to "reflect more of the ideas of people who live outside of the area that the plan is trying to attract rather than current residents" (Tom Beckwith, MLK Subarea Plan and EIS Working Group Meeting – November 8, 2012) so I have very deep concerns about whether the city is genuine in addressing the concerns of the current residents.

The groups such as Hilltop Business District Association, Central Neighborhood Council, and Hilltop Action Coalition that the city currently works with represent the needs of a very small selection of residents in the community with interests other than affordable housing, and I think the planning commission needs to do much better at getting more fruitful input from the actual residents of Hilltop.

(253) 632-5095
1231 S Ridgewood Ave.

Whitney Brady

STATE OF WASHINGTON
DEPARTMENT OF ECOLOGY
PO Box 47775 • Olympia, Washington 98504-7775 • (360) 407-6300
711 for Washington Relay Service • Persons with a speech disability can call 877-833-6341

January 22, 2014

Brian Boudet, Project Manager
City of Tacoma
Planning & Development Services
747 Market Street, Room 345
Tacoma, WA 98402

Dear Mr. Boudet:

Thank you for the opportunity to comment on the final draft Plan & final environmental impact statement for the Hilltop (MLK) Subarea Plan proposal. The Department of Ecology (Ecology) reviewed the information provided and has the following comment(s):

TOXICS CLEANUP/TACOMA SMELTER PLUME:
Elizabeth Weldin (360) 407-7094

Ecology recognizes this is a non-project action.

The City of Tacoma is located in an area that may have been contaminated with heavy metals due to the air emissions originating from the old Asarco Smelter in north Tacoma (visit Ecology's Tacoma Smelter Plume map search tool: https://fortress.wa.gov/ecy/smeltersearch/).

Soil contamination from the former Asarco smelter poses a risk to human health and the environment. Children are at especially high risk from direct exposure to contaminated soil. Construction workers, landscapers, gardeners, and others who work in the soils are also at risk.

The link below provides a fact sheet that explains more how the arsenic and lead clean-up levels were set and why Ecology sees that they are protective for human health: http://www.ecy.wa.gov/programs/tcp/sites_brochure/tacoma_smelter/2011/brochuresAndPubs.html - Click on "Level and Action Level FAQ."

Ecology recommends that the City of Tacoma consider adopting future policies related the Tacoma Smelter Plume.

- Ecology also recommends that the City of Tacoma include the following as conditions of approval for future grading projects located in the Hilltop MLK Subarea:

- Sample the soil and analyze for arsenic and lead. The applicant shall contact Elizabeth Weldin with the Southwest Regional Office (SWRO), Toxics Cleanup

Program at the phone number given above or via email at ewel461@ecy.wa.gov for guidance about soil sampling within Tacoma Smelter Plume. The soil sampling results shall be sent to the local land use permitting agency and Ecology for review.

- If lead or arsenic are found at concentrations above the Model Toxics Control Act (MTCA) cleanup levels (Chapter 173-340 WAC); the owners, potential buyers, construction workers, and others shall be notified of their occurrence. The applicant shall also contact the Environmental Report Tracking System Coordinator at the Ecology SWRO at (360) 407-6300. The MTCA cleanup level for arsenic is 20 ppm and lead is 250 ppm.

- If lead, arsenic and/or other contaminants are found at concentrations above MTCA cleanup levels, the applicant shall:

  1) Enter into the Voluntary Cleanup Program with - Ecology prior to issuance of any site development permits for this proposal and/or the initiation of any grading, filling, or clearing activities. For more information on the Voluntary Cleanup Program, visit Ecology website at: http://www.ecy.wa.gov/programs/tcp/vcp/vcpmain.htm.

  2) Obtain an opinion letter from Ecology stating that the proposed soil remediation will likely result in no further action under - MTCA prior to the issuance of any site development permit and/or the initiation of any grading, filling, or clearing activities. The issued site development permit plans shall be consistent with the plans reviewed and deemed consistent with MTCA by Ecology. The applicant shall provide to the local land use permitting agency the opinion letter from Ecology.

  3) Prior to finalizing site development permits, provide to the local land use permitting agency "No Further Action" determination from Ecology indicating that the remediation plans were successfully implemented under MTCA.

If Ecology determines this project should not be part of the Voluntary Cleanup Program, Ecology will contact the lead agency and discuss possible options.

- If soils are found to be contaminated with arsenic, lead, or other contaminants, extra precautions shall be taken to avoid escaping dust, soil erosion, and water pollution during grading and site construction. Site design shall include protective measures to isolate or remove contaminated soils from public spaces, yards, and children's play areas. Contaminated soils generated during site construction shall be managed and disposed of in accordance with state and local regulations, including the Solid Waste Handling Standards regulation (Chapter 173-350 WAC). For information about soil disposal contact the local health department in the jurisdiction where soils will be placed.

For assistance and information about Tacoma Smelter Plume and soils contamination, contact Elizabeth Weldin at the phone number given above or via email at ewel461@ecy.wa.gov.

TOXICS CLEANUP: Cris Matthews (360) 407-6388

The area encompassed by the "Hilltop MLK Subarea Plan" (Plan) includes known & suspected Ecology's Toxics Cleanup Program sites in various stages of regulation and involvement ranging from active remedial work to properties on an Ecology list of confirmed or suspected contamination awaiting some form of future attention. This does not include potential unknown, as yet undiscovered, contamination which could greatly increase the number of affected sites in the Plan area.

Ecology has concern that under the cumulative environmental impact analysis approach proposed in the Plan, future project-specific environmental review would be eliminated. The project-specific SEPA process allows interested and/or affected parties to comment on project proposals, and is means for project applicants and the City of Tacoma to be aware of potential environmental problems associated with proposed actions and be informed of measures to protect themselves and others.

Future Plan area project-specific work should include pre-development contact and planning by the project applicant with Ecology to determine the cleanup regulatory status of a particular property or properties, and any associated requirements that may apply as a result of that status.

In addition, environmental contamination – either known, suspected, or encountered, whether the result of project-specific development or otherwise – shall be reported to Ecology according to the requirements of the Model Toxics Control Act (Chapter 173-340 WAC, or MTCA). This applies to every part of the Plan area and is independent of any proposed or final environmental impact analysis conclusions.

WATER QUALITY/WATERSHED RESOURCES UNIT:
Christina Curtiss (360) 407-0246

Any discharge of sediment-laden runoff or other pollutants to waters of the state is in violation of Chapter 90.48 RCW, Water Pollution Control, and WAC 173-201A, Water Quality Standards for Surface Waters of the State of Washington, and is subject to enforcement action.

Projects within the Subarea Basin Plan may require a construction stormwater permit (also known as National Pollutant Discharge Elimination System (NPDES) and State Waste Discharge General Permit for Stormwater Discharges Associated with Construction). This permit is required for projects which meet both of the following conditions:

1. One or more acres of soil surface area will be disturbed by construction activities.
2. The site already has offsite discharge to waters of the state or stormdrains or will have offsite discharge during construction.

An application with instructions can be downloaded from Ecology's website at: http://www.ecy.wa.gov/programs/wq/stormwater/construction/ - Application. Construction site operators must apply for a permit at least 60 days prior to discharging stormwater.

Specific projects within the Subarea Basin Plan may have to complete an additional SEPA process for the specific proposed project prior to obtaining a construction stormwater permit.

Ecology's comments are based upon information provided by the lead agency. As such, they may not constitute an exhaustive list of the various authorizations that must be obtained or legal requirements that must be fulfilled in order to carry out the proposed action.

If you have any questions or would like to respond to these comments, please contact the appropriate reviewing staff listed above.

Department of Ecology
Southwest Regional Office

(SM:13-6262)

cc: Christina Curtiss, WQ
Josh Klimek, HQ/WQ
Cris Matthews, TCP
Elizabeth Weldin, TCP

January 22, 2014

Brian Boudet
City of Tacoma
747 Market St.
Tacoma, WA 98402-3769

RE: DRAFT HILLTOP SUBAREA PLAN

Dear Brian,

Thank you for the opportunity to be involved with and comment on the Draft Hilltop Subarea plan. We are supportive of the City's vision to encourage development and economic revitalization in the area. After reviewing the draft plan, we have a recommendation.

Section 13.xx.030 A. Level 1: describes the required information for a level 1 impact and assessment. However, there is nothing mentioned in this section that would include any information on transit availability or impacts near a project site.

Section 13.xx.030B. Level 2: has a higher level of analysis and is where we do see a requirement for information including adjacent transit routes and service.

We are of the opinion that a developer should be required to complete the transit service analysis regardless of the size or nature of a project. Therefore, we request that the following language be included for both Level 2 AND Level 1 (this is subsection 5):

> "Summarize relationships and potential impacts to transit service, passenger rail, and non-motorized facilities in the site vicinity, and traffic safety, to the extent affected by the proposed development."

Anything we can do to encourage developers to think about and consider transit early in their design is a benefit. Even a small development can greatly impact an existing bus stop for example.

Thank you for your consideration. If you have any questions please contact me at (253) 581-8130 or madams@piercetransit.org.

Sincerely,

Monica Adams

Monica Adams, Senior Planner
Transit Development

Cc: Lynne Griffith
Jay Peterson
Tina Lee
Peter Stackpole
Justin Leighton

#14-011 Hilltop Subarea Plan.doc

From: Linsss South [mailto:lsouth91@gmail.com]
Sent: Wednesday, January 29, 2014 9:53 AM
To: Planning
Subject: Please preserve low income/affordable housing

Hi my name is Linsey Southwick I'm interested in learning about this housing resource . I have been trying to get more resources on housing here in Tacoma . I would appreciate the help :) thanks

From: Misha LaPoint [mailto:mishaandevan@gmail.com]
Sent: Wednesday, January 29, 2014 12:11 PM
To: Planning
Subject: Affordable Housing in Tacoma

Dear Mr. Boudet,

I am a former resident of Tacoma.

I believe that housing should be accessible and affordable for ALL residents in the city, not just those with professional education and careers.

Misha LaPoint
951 South 327th Street
Federal Way, WA 98003

From: Mary Smith [mailto:ciarrai0@gmail.com]
Sent: Thursday, January 30, 2014 1:26 PM
To: Planning
Subject: Affordable Housing in Tacoma

Dear Mr. Boudet,

It is my understanding that the city would like to make 20% of the housing affordable to residents of Hilltop over the next ten years while redefining what is affordable. I would venture to guess that less than 20% of housing is affordable to ordinary working people and the poor, in this current economic crisis.

Why not a better goal? Instead of setting the bar low at 20%, why not try to make 100% of the housing affordable to the working class and poor? The Tacoma News Tribune reported several months ago that one in every eighteen homes in Pierce County was in foreclosure. That was followed by a report that home sales of Tacoma homes had increased and this was used as an economic indicator that we were slowly edging out of this recession. But then it was then made known that wealthy investors from other states were buying up foreclosed properties to rent back to Tacomans and that many of these investors had become absentee slumlords.

City officials have become quite out of touch with their constituents because they are at odds with the very people they are supposed to represent. They are used to cutting deals with the rich, which benefit the rich, supposedly for the sake of helping us out. With this economic crisis, more and more people are sharing tight living spaces, straining relationships with family and friends.

I am a school bus driver and I see homes sitting vacant all around the city while the homeless are quite visible in my neighborhood. There is an estimated 27,000 homeless children in Washington State, many who live and attend school in Pierce County. The system falls short in meeting the needs of the most vulnerable.

There is a shortage of jobs but many jobs could be created that would bolster the economy. Homes are labor intensive but a program such as Habitat for Humanity could help mediate the work that keeps homes functional. Houses need roofs, flooring, carpets, furnaces, electrical repairs, plumbing and all sorts of upkeep.

Instead of waiting for some wealthy investor or bank to throw you out of your home, make repairs and sell it for half of what the buyer was paying for it, there should be a program to renovate homes for those who live in them, which would also create jobs that would feed the local economy. There should be moratorium on evictions and foreclosures until this economic disaster can be worked out. Who does it help when people are thrown to the streets because they can’t pay the rent or their mortgage? We didn’t cause this economic crisis, Wall Street did, and we shouldn’t have to pay for it!

Sincerely,
Mary Smith
(253) 355-4211
815 Pacific Ave, Apt 217
Tacoma, WA 98402

CITY OF TACOMA

TEMPORARY HOMELESS CAMP
PERMIT PROCESS
Proposed Amendments to TMC 13.05 and 13.06.635 - Temporary Uses

John W. Harrington, Jr.
Principal Planner
Planning and Development Services Dept.

Planning Commission Meeting
February 5, 2014

Public Hearing Issues

- Emergency extensions omitted
  - Other cities have the exemption
  - Can be unforeseen circumstances (Sammamish example)
  - Staff recommends to add one time 40-day extension requested within 30 days of end camp timeframe

Public Hearing Issues

- City is proposing too many regulations
  - Requirements more stringent than for other uses in the neighborhood (fencing and background checks)
  - Showers too difficult, hygiene stations instead
  - Required for the safety and health of camp residents

Public Hearing Issues

- Camp residents need to have dignity
  - Let residents self regulate
  - Residents provide community and camp service
  - Homeless are safer in the camps
  - Camp rules are to protect residents
  - Success and sustainment of camps related to positive image

Public Hearing Issues

- Camps are positive option for the homeless
  - Public outreach: Hope that better options could be utilized for shelter

Public Hearing Issues

- Accident Potential Zone II
  - Runway approach to JBLM in small portion of South Tacoma
  - Concern for locating a camp in this area
  - City staff working with SSMCP on Joint Land Use Study
    - Policy in comprehensive plan
    - new overlay zone regulations would restrict high occupancy uses

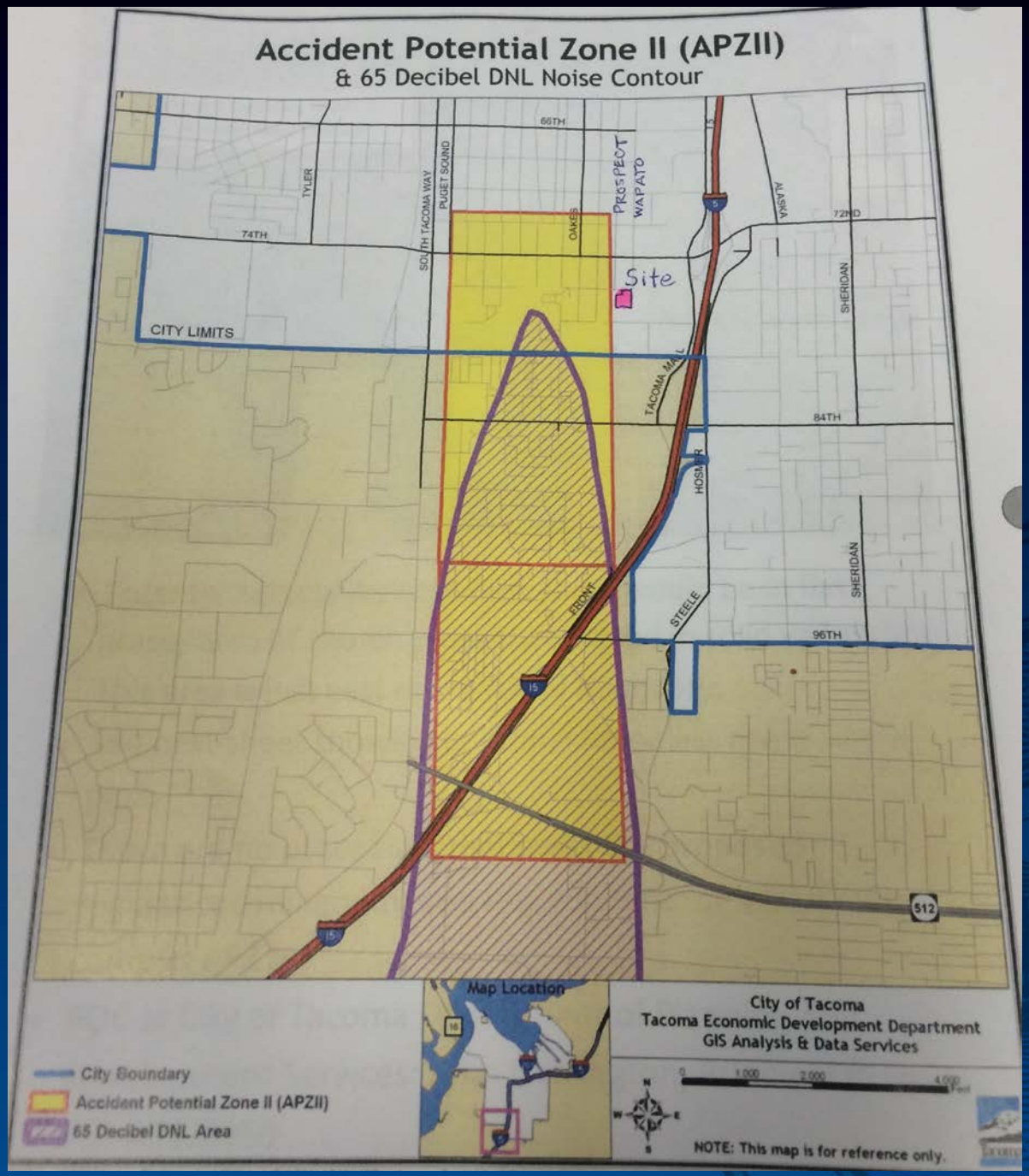
Accident Potential Zone II (APZII)
& 65 Decibel DNL Noise Contour
66TH
74TH
72ND
84TH
96TH
TYLER
SOUTH TACOMA WAY
PUGET SOUND
OAKES
PROSPECT
WAPATO
ALASKA
SHERIDAN
CITY LIMITS
Site
TACOMA MALL
HOSMER
STEELE
FRONT
I-5
512
Map Location
City of Tacoma
Tacoma Economic Development Department
GIS Analysis & Data Services
City Boundary
Accident Potential Zone II (APZII)
65 Decibel DNL Area
NOTE: This map is for reference only.

Next Steps

2014

Feb 19: Planning Commission recommendation

Feb-Apr: City Council consideration

SUSTAINABILITY CODE AMENDMENTS APPLICATION #2013-09

STEPHEN ATKINSON
PLANNING AND DEVELOPMENT SERVICES
CITY OF TACOMA

FEBRUARY 5, 2014

Purpose of the Amendments

Tacoma's Approach to Sustainability

Sustainability is a term that describes taking care of the environment, economy, and community in a way that allows present and future generations to thrive. Sustainability is less a specific outcome than a means to an end; it involves taking the long view and recognizing the integrated nature of the world and that natural resources are finite. A sustainable approach embeds these concepts in day-to-day decisions and aligns interests and actions toward shared community goals.

Tacoma's Vision

In Tacoma, we strive to achieve an exceptional quality of life for every generation and leave a legacy of stewardship. We work together to achieve lasting and equitable prosperity; build safe, healthy, vibrant communities; and minimize our negative impacts in order to conserve the natural resources that sustain us.

Purpose of Today's Presentation

- Continue discussion on EV and Bicycle Infrastructure
- Discuss LID amendments and Setback exceptions
- Items on the "parking lot"
- Recommend for public review

Scope of Work

- Part of this Package
  - Electric Vehicle Infrastructure
  - Bicycle Start and End of Trip Facilities
  - Exterior Insulation
  - Low Impact Development

- "Parking Lot"
  - Light Trespass
  - Heat Pumps
  - Green Roofs

Scope of Work

- Part of this Package
  - **Electric Vehicle Infrastructure**
  - Bicycle Start and End of Trip Facilities
  - Exterior Insulation
  - Low Impact Development

- "Parking Lot"
  - Light Trespass
  - Heat Pumps
  - Green Roofs

Scope of Work

- Part of this Package
  - Electric Vehicle Infrastructure
  - **Bicycle Start and End of Trip Facilities**
  - Exterior Insulation
  - Low Impact Development

- "Parking Lot"
  - Light Trespass
  - Heat Pumps
  - Green Roofs

Scope of Work

- Part of this Package
  - Electric Vehicle Infrastructure
  - Bicycle Start and End of Trip Facilities
  - **Exterior Insulation**
  - Low Impact Development

- "Parking Lot"
  - Light Trespass
  - Heat Pumps
  - Green Roofs

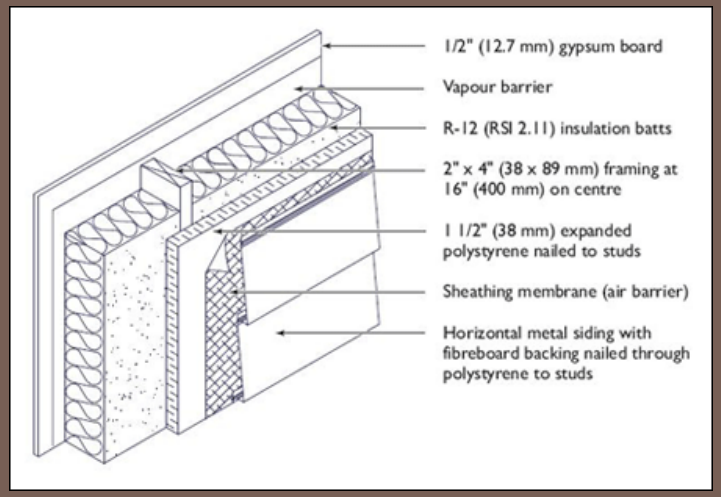

Scope of Work

- Part of this Package
  - Electric Vehicle Infrastructure
  - Bicycle Start and End of Trip Facilities
  - Setback Exceptions for Exterior Insulation
  - **Low Impact Development**

- "Parking Lot"
  - Light Trespass
  - Heat Pumps
  - Green Roofs

Next Steps

- Additional edits or comments?
- Request release for public comment

Minor Amendments and Refinements

Application No. 2014-11

City of Tacoma

Planning and Development Services

February 5, 2014

Proposed Changes to the Comprehensive Plan

- Updating the Commute Trip Reduction (CTR) section to reflect the latest regulatory requirements and program opportunities approved by the Washington State Department of Transportation.

- Updating tables within the Mobility Master Plan.

Proposed Code Changes

Changes to Chapter 13.04 Platting and Subdivisions, including:

- The requirement to provide legal descriptions for all proposed lots within a short plat will not be required at submittal but prior to recording for verification by the City Surveyor.
- The requirement that a vicinity sketch is included on the notice has been removed, consistent with the State's requirement.
- Development standards for pipe stem lots have been added.

City of Tacoma
Planning & Development Services
747 Market Street, Room 345
Tacoma, WA 98402

AGENCY/DEPARTMENTAL NOTICE OF APPLICATION

Date of notification: February 3, 2014
Application received: January 24, 2014
Application complete: January 24, 2014

Applicant: Tony Usach, 6406 54th St NW, Gig Harbor, WA 98335, 253-376-8094

Location: 5826 South Fife St, Parcel Number 7805000740

Application No(s): MPD2014-40000216639

Proposal: The applicant has requested Final Plat of "MPD2013-40000207993", a 2 lot short subdivision. The site received preliminary short plat approval on November 12, 2013. See file number MPD2013-40000207993. The site is located in the "R-2 STGPD" Single-Family Dwelling District and South Tacoma Groundwater Protection District.

Written **AGENCY/DEPARTMENTAL comments** must be submitted by **Feburary 17, 2014** to the below staff contact.

For further information regarding this Notice of Application, **log onto www.tacomapermits.org and select "Message Board" then "Public Notices and Decisions"**

Documents to Evaluate the Proposal: Final Short Plat Plan, Land Use Application

Studies Requested: Not applicable to this proposal

Other Required Permits: N/A

Applicable Regulations of the *Tacoma Municipal Code*:

- Chapter 13.04 Platting and Subdivisions
- Chapter 13.05 Land Use Permit Procedures
- Chapter 13.06 Zoning
- Other associated regulations and policies

A final decision on the proposal will be made by the Director of PDS following the close of the agency/departmental comment period. The decision will be mailed to the applicant, property owner, and project consultants. The decision will include appeal provisions.

Staff contact: Dustin Lawrence, Associate Planner
747 Market St, Room 345, Tacoma, WA 98402; 253-591-5845; dlawrence@cityoftacoma.org

Environmental Review: Pursuant to WAC 197-11-9-800 and the City of Tacoma's SEPA Procedures, this proposed action is exempt from the Threshold Determination and Environmental Impact Statement requirements of SEPA.

The City of Tacoma does not discriminate on the basis of disabilities in any of its programs or services.
Upon request, special accommodations can be provided within five (5) business days by contacting the City Clerk's Office at 591-5171 (voice) or 591-5058 (TDD)

Current Standards for Pipestem Lots

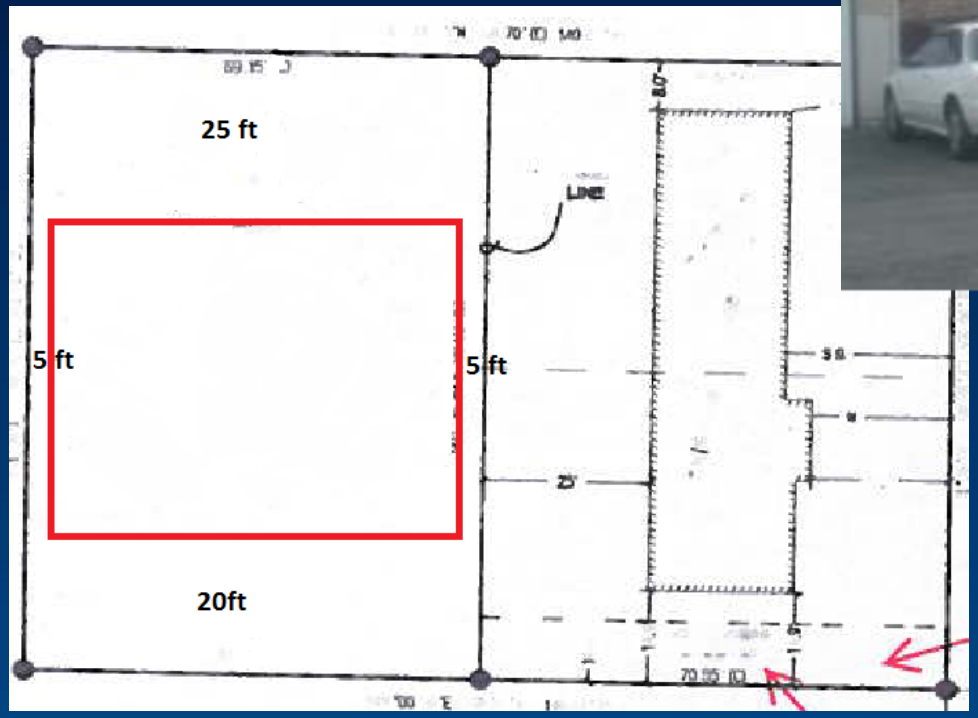

Proposed New Pipestem Lot Standards

- Pipestem lots shall have the same setbacks along all lot lines. Required setbacks are: for R-1 districts is 15 feet. For R-2 and above districts is 10 feet.

- The height of the main building on a pipe stem lot shall be no taller than 25 feet or no more than the average of the height of the dwellings on each abutting property line and shall not exceed the height of the zoning district.

New Standards

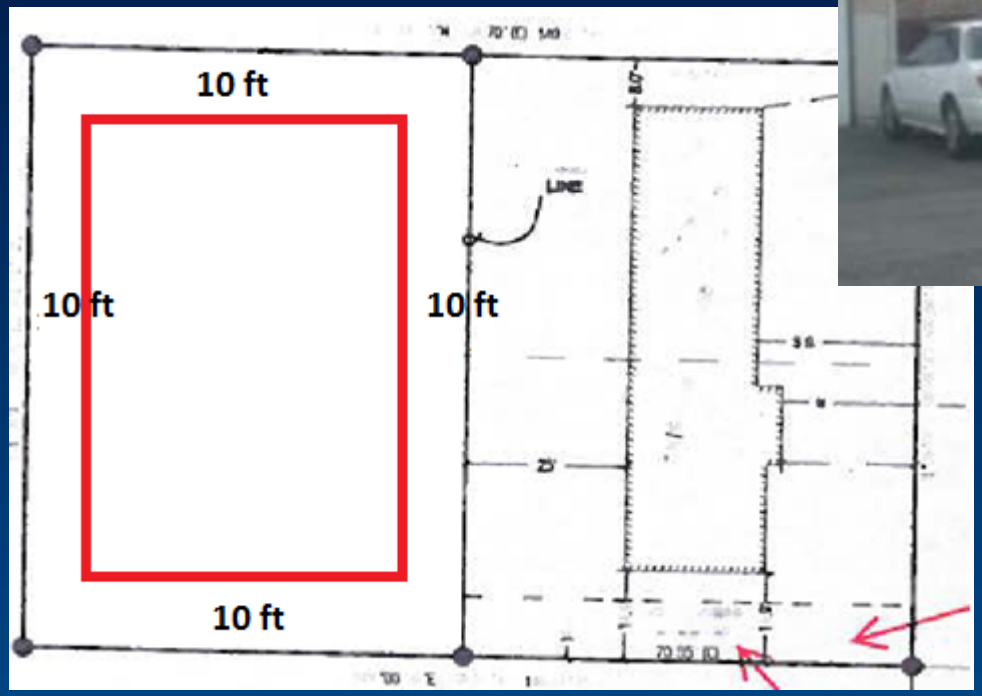

Example of New Standards

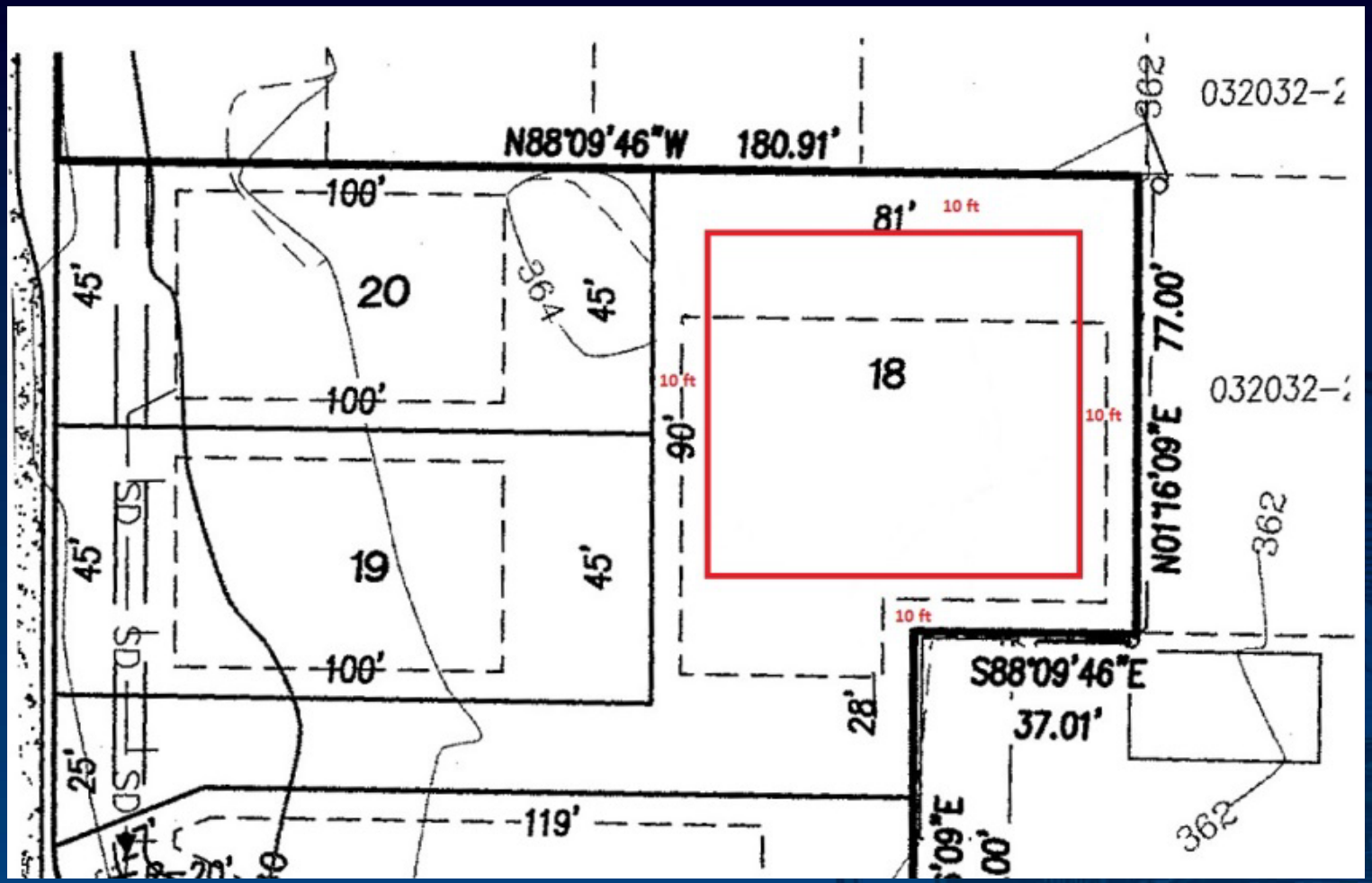

Proposed Code Changes

Changes to 13.05 Land Use Permit Procedures, including:

- Updating the Expiration of Permits chart to ensure accuracy and consistency within other code sections and State Regulations.
- Clarification the Hearing Examiner's authority to hear appeals of Short Plat decisions.

Reduction in Process for Major Modifications to Existing Conditional Use Permits

Current Process

- Level II permit type
- Public notice is sent to neighbors within 400 feet
- 30-day comment period
- Newspaper notice

Proposed Process

- Level I permit type
- Public Notice is sent to neighbors within 100 feet
- 14-day comment period

Permit Type	Preapplication Meeting	Notice: Distance	Notice: Newspaper	Notice: Post Site	Comment Period	Decision	Hearing Required	City Council	Expiration of Permit
Conditional use (new)	Required	400 feet	No	Yes	30 days	Director	No	No	5 years
Conditional Use Minor Modification	Optional	No	No	No	No	Director	No	No	5 years
Conditional Use Major Modification	Recommended	100 feet	No	Yes	14 Days	Director	No	No	5 years

Proposed Code Changes

Changes to 13.06 Zoning, including:

- The addition of provisions requiring single-family dwellings to be oriented to the adjacent street or right-of-way.
- A clarification to the Home Occupation Standards that on-premises sales of products associated with a Home Occupation are accessory to a service offered. For example, a home occupation engaged in hair salon services would be allowed to sell hair products and accessories.
- Removal of references to the zoning designation Urban Center Mixed-Use - Tacoma Dome (UCX-TD) as it has been replaced with Downtown Mixed-Use (DMU).
- The correction of miscellaneous errors and scrivener's errors.

Proposed Code Changes

Changes to 13.11 Critical Areas Preservation Ordinance, including:

- Changes making the CAPO compliant with the new Shoreline Master Program and code.
- The removal of and all invalid references to critical areas that are now regulated under the shoreline code.

Proposed Code Changes

Changes to 13.12 SEPA, including:

- The clarification of the appeals process for Shoreline Substantial Development Permits. Appeals of Shoreline Substantial Development Permits are appealable to the Shoreline Hearings Board.

Next Steps

March 19	Annual Amendment Public Hearing
April 2	Planning Commission's Review of Public Comments/Testimony
April 16	Planning Commission Recommendation
May/June	Council Review and Adoption

Minor Amendments and Refinements

Application No. 2014-11

City of Tacoma

Planning and Development Services

February 5, 2014

Tina Lee

Comments for Planning Commission 2/5/14

Item D-2 – Temporary Homeless Camp Permitting Process

1. Concur with the recommendation to add a one-time extension of up to 40-days if granted by the Director for unforeseen circumstances
2. Concur with leaving obscuring fencing language as proposed in initial code language
3. I have no additional modifications or comments.

Item D-3 – Sustainability Code Amendments. – I do not support moving this forward at this time without additional review and changes to Table 13.06.512 E

Comment: Page 8 or 9 of staff report. The communication outreach to date has centered with Master Builders Association, industry representatives and neighborhood councils – has this been for both the electric vehicle parking and infrastructure to support bikes? Please include universities, Tacoma Mall, hospitals, as well as transit - both Sound Transit and Pierce Transit, in the additional outreach during the public hearing and notice process. These groups will be interested in the Pedestrian and Bike Support Standards.

Question: Page 2 of 9 of staff report indicates that Seattle survey's suggest that proximately 50% of the population has access to a working bicycle but regular ridership is under 20%. **What is the percent of bicycle ridership trips in Tacoma or Pierce County?** I didn't see a reference to this information in the staff report.

Comment: The only information I could easily reference is the Tacoma South Downtown Subarea Plan EIS. Section 3.11 Transportation, pg. 3.11-8, Table 3.11-3 Travel Mode Share, Regional Impacts, indicates that bike trips are primarily 1.6% for all alternatives (No-Action, Modest Build Out 2030 to Large-scale Build Out 2030.) Tables 3.11-7 and 3.11-8 provide Study Area Impacts, Mode Share, Trips with Destinations in Study Area and Trips with Origins in the Study Area. Both the Destinations and Origins indicate roughly 2% by 2030 for the bike travel mode. I can't get a sense of the guide that staff is using to calculate potential code requirements. It feels like 5%-6% may the target staff is setting, to me this is too high and I do not support those recommendations.

Comment: Table 13.06.512 E. Quantity Requirements for Short and Long Term Bicycle Parking. Again similar to my comment above, I am not comfortable with the recommendations from staff, they appear excessive. I need a better explanation how these targets have been reached. Examples:

Use #10 – looking at these targets I don't have a sense of the typical size of a typical church, what would be the sq ft and how many long term stalls would be required with 1 per 12,000 sq feet. In addition the

code would require 1 per 40 seats roughly 2.5% of the seating capacity. Putting together the long term and short term bike infrastructure required, this appears to be much higher than the estimated trips utilizing the 2% destination trips by 2030 in the Tacoma South Downtown EIS.

Use #13 – College & Universities. Similar to my question from the Jan 8 2014 meeting, what are estimates for the number of bike storage short term & long term that would be required from 10% of the max students or 1 per 40,000 sq ft. What have been your conversations with the universities and do you foresee as the number of bike facilities that would be required at one of our major universities?

Use # 24-26 Transportation Facilities. I still disagree with the recommended number of long term and short term stalls. This basically splits the requirement from the Jan 8 draft between long-term and short-term with 2.5% required for both short term or long term storage, or 5% of the parking requiring a bike storage facility. Given that maybe 2% of the estimated destination trips are bike trips, this continues to appear excessive.

Comment: I agree with the need to update this section of the code and to ensure that adequate bike infrastructure is available for that mode split. My concern is the quantities that are being recommended with this language.

Item D-4 – Plan & Code Cleanup – no comments or recommended changes. I recommend approving for distribution for public review

Item D-5 Mixed –Use Centers Zoning Code Update - no additional comments